TSP-10682

Boston

Toddler play system model Boston

Recycled HDPE:

Steel:

Climbing Crawling Sliding Hanging Jumping



Ages 2-5 | Users 44 | Dimensions L: 15'-11.2" W: 16'-11.1" H: 10'-0.6" | cm L: 498 W: 529 H: 314 | Safety Zone 30'-6.9"/27'-7.6" | cm 923 / 841 | Fall Height 3'-6.2" |110 cm | Accessible

The Boston is an inclusive toddler play structure, sweet and rich in elements. Includes accessible stairs, a slide, a crawling barrel, a colorful inclined bridge, a fireman's pole, a hanging bar, and a playhouse. Suitable for movement and imagination games for young children.

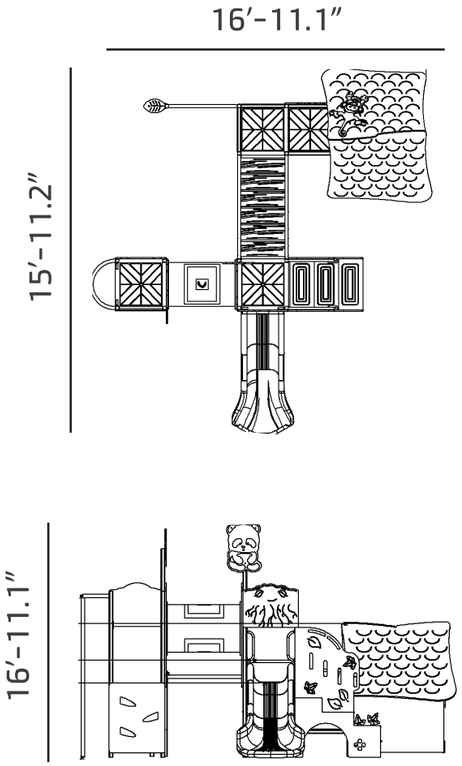

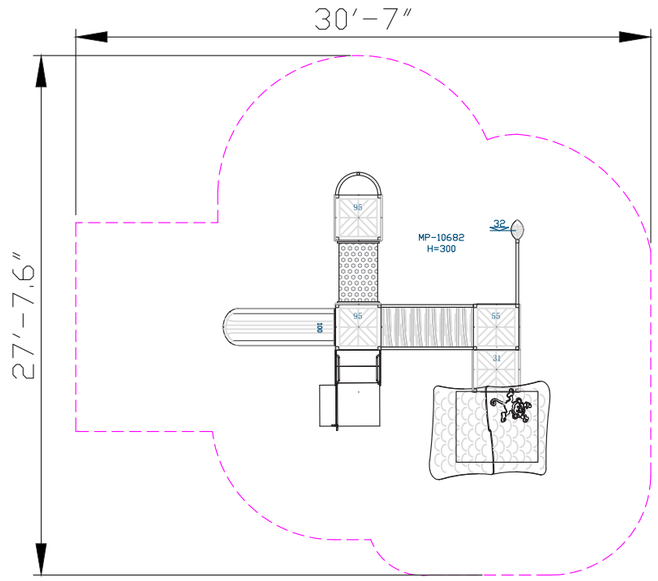





Recycled HDPE

HDPE (High-Density Polyethylene) is a recycled material made from high-density polyethylene, produced from recycled materials that allows for further recycling. It excels in resistance to UV rays and wear and tear, making it particularly suitable for use in outdoor playground equipment. Its touch is smooth and pleasant, and its appearance is maintained over time. The advantages include high resistance to harsh weather conditions and environmental preservation. The material is capable of absorbing high energy, which helps prevent fractures.



Steel

Steel structure that is strong and durable, oven-painted galvanized and coated with lead-free polyester powder for corrosion and rust resistance. The steel meets strict EN 1176 standards, ensuring high quality and safety. The steel is anti-vandalistic, requires minimal maintenance, and is fully recyclable. The high-quality paint ensures weather resistance and maintains a new appearance over time.

Stepping Bridge

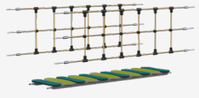

The stepping bridge provides a safe and convenient passage between parts of the structure, developing players' motor skills and balance. Playing on the bridge encourages movement and a sense of achievement.

Sliding Pole



The sliding pole allows for a quick and safe descent from the play structure, providing a fun and thrilling play experience. Young players can feel like firefighters in action. Using the pole strengthens hand and upper body muscles. Players learn to control the speed and direction of their descent, contributing to the development of control skills and self-confidence.

Climbing Wall



The climbing wall offers a physical challenge that develops the muscle strength, coordination and weight of the players. Climbing the wall improves their problem solving. This is a place where players overcome fears and develop courage and self-confidence.

Ventilation Window



A ventilation window provides a sense of openness and ventilates the structure, enhancing the play experience and adding an element of enjoyment and freshness. It also allows for maintaining eye contact between the player and companion, strengthening the sense of security.

Toddler Slide



The toddler slide provides a safe and enjoyable sliding experience for little ones. It develops coordination, movement, balance, and self-confidence for young players.

Crawl Tunnel



The Crawl Tunnel is made of ropes in natural hues that mimic tree trunks and forest branches, giving a natural and adventurous look. The bridge is elevated, enhancing the sense of adventure and challenge as players progress along a relatively narrow strip. Playing on the Crawl Tunnel encourages players to maintain balance and stability while moving, providing a fun and exciting experience reminiscent of walking through a wild forest.

Overlays



Unique and designed visual elements that enhance the overall appearance of the structure. The overlays are durable and add an extra layer of creativity and enriching play experience for players.

Engravings



Engravings add designs and illustrations to parts of the structure, enriching the play experience with an interesting visual element.





Cognitive Development

Curiosity - Encouraging exploration and discovery through equipment providing new and unfamiliar experiences. Creativity- Developing creative thinking and imagination in open and interactive play.

Emotional Development

Imagination- Encouraging imagination and creating play worlds. Courage- Facing fears and new challenges. Confidence- Building self-confidence and belief in one's personal abilities. Independence- Developing independence and the ability to make personal decisions. Patience- Practicing patience and waiting for one's turn.

Social Development

Communication- Developing effective and clear communication skills with playmates Friendship creation- Creating friendships and strengthening social bonds. Communication- Developing effective and clear communication skills with playmates Friendship creation- Creating friendships and strengthening social bonds.

Physical Development

Climbing - Strengthening arm and leg muscles, developing fitness and endurance Sliding - Strengthening leg and arm muscles and improving coordination.

Motor Development

Hand-eye coordination - Developing coordination and precision in activities requiring fine motor skills. Foot-eye coordination - Improving coordination and balance through various equipment.