TSP-10718

“Lil Bubble”

Toddler play system model Lil Bubble

Recycled HDPE:

Steel:

Balancing

Climbing

Sliding

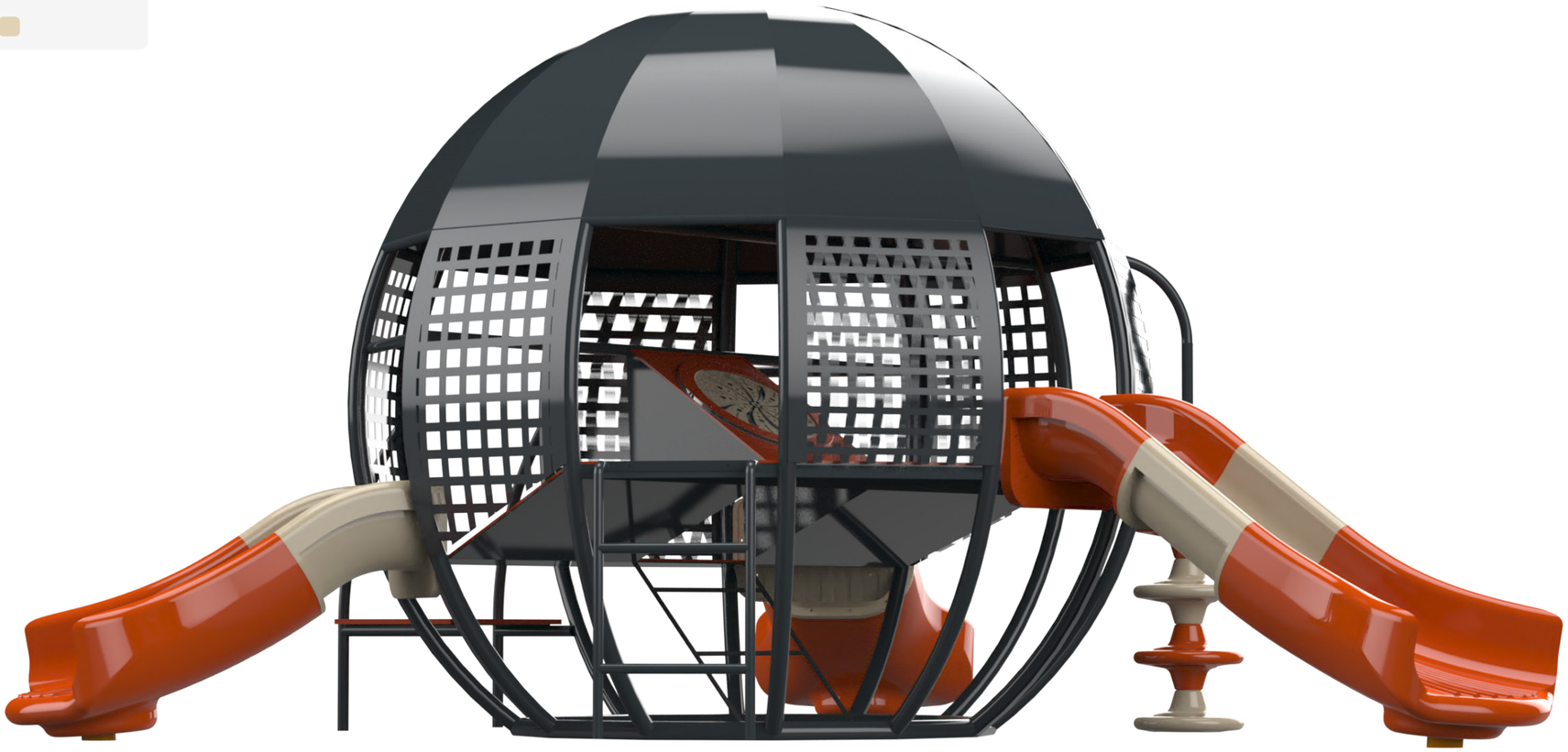

Ages 2-5

Users 15

Dimensions L: 16'-8.4" W: 17'-2.2" H: 8'-3.8" | cm L: 522 W: 537 H: 260

Safety Zone 31'-7.2"/31'-7.1" | cm 963/963

Fall Height 3'-6.2" | 110 cm

Accessible

Our Bubbles structure won the 2019 Red Dot Design Award, selected out of more than 4,218 competing entries from more than 48 countries. Since the impressive structure is intended for older kids, we decided we should make it accessible to toddlers as well. So we took the top of the tower - the jewel in the crown, and brought it down to ground level.

Fun new elements were introduced into the perfect spherical structure, including ladders and climbing ropes of four different types, slopes and platforms at different heights and 3 toddler slides.

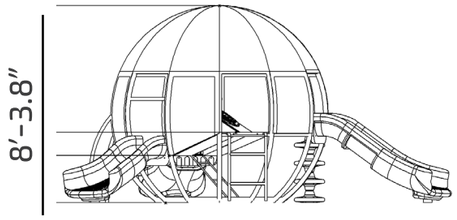

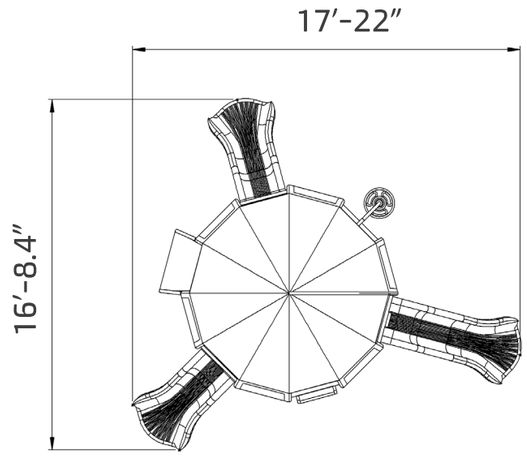

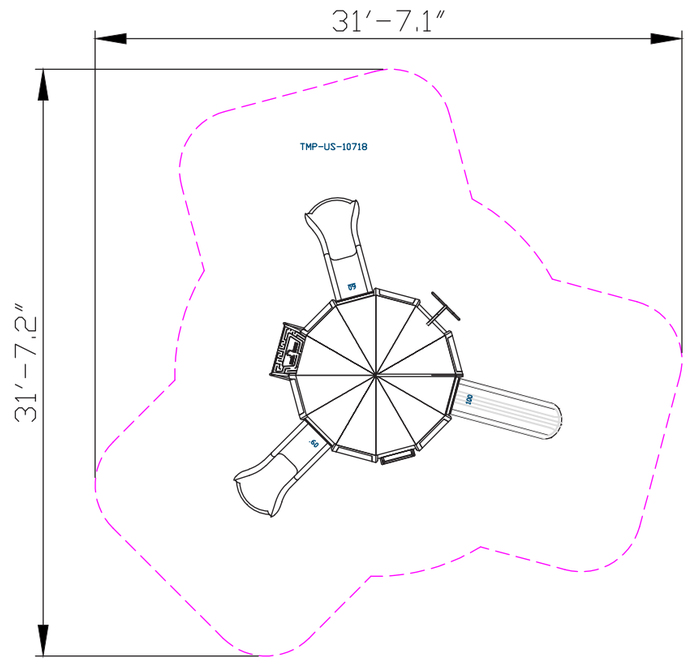





Recycled HDPE

HDPE (High-Density Polyethylene) is a recycled material made from high-density polyethylene, produced from recycled materials that allows for further recycling. It excels in resistance to UV rays and wear and tear, making it particularly suitable for use in outdoor playground equipment. Its touch is smooth and pleasant, and its appearance is maintained over time. The advantages include high resistance to harsh weather conditions and environmental preservation. The material is capable of absorbing high energy, which helps prevent fractures.



Steel

Steel structure that is strong and durable, oven-painted galvanized and coated with lead-free polyester powder for corrosion and rust resistance. The steel meets strict EN 1176 standards, ensuring high quality and safety. The steel is anti-vandalistic, requires minimal maintenance, and is fully recyclable. The high-quality paint ensures weather resistance and maintains a new appearance over time.



Climbing Element

The climbing element offers a physical challenge that develops muscle strength, coordination, and balance. Climbing on the element encourages children to overcome fears and build self-confidence and perseverance. Additionally, the element helps develop problem-solving skills as children look for efficient and safe ways to climb.



Toddler Slide

The toddler slide provides a safe and enjoyable sliding experience for little ones. It develops coordination, movement, balance, and self-confidence for young players.

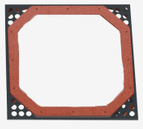

Ventilated Panel

The ventilated panel offers an activity that stimulates the sense of touch and provides a feeling of wind and freshness. Playing with the panel develops players' motor and sensory skills.



Play Panel

The play panel provides a variety of interactive play options that develop players' motor and cognitive skills. Each panel offers a unique activity that stimulates thinking and encourages players to learn and discover more.

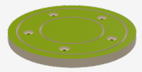

Tread Surface

The tread surface provides support and safety during play on the structure. The surface is designed to prevent slipping and improve players' stability and security.



Ladder

The ladder provides vertical access to the play structure and encourages players to develop physical skills such as strength, coordination, and balance. Climbing the ladder promotes courage and independence as players face heights and new challenges. The ladder strengthens hand and arm muscles and encourages proper body use.



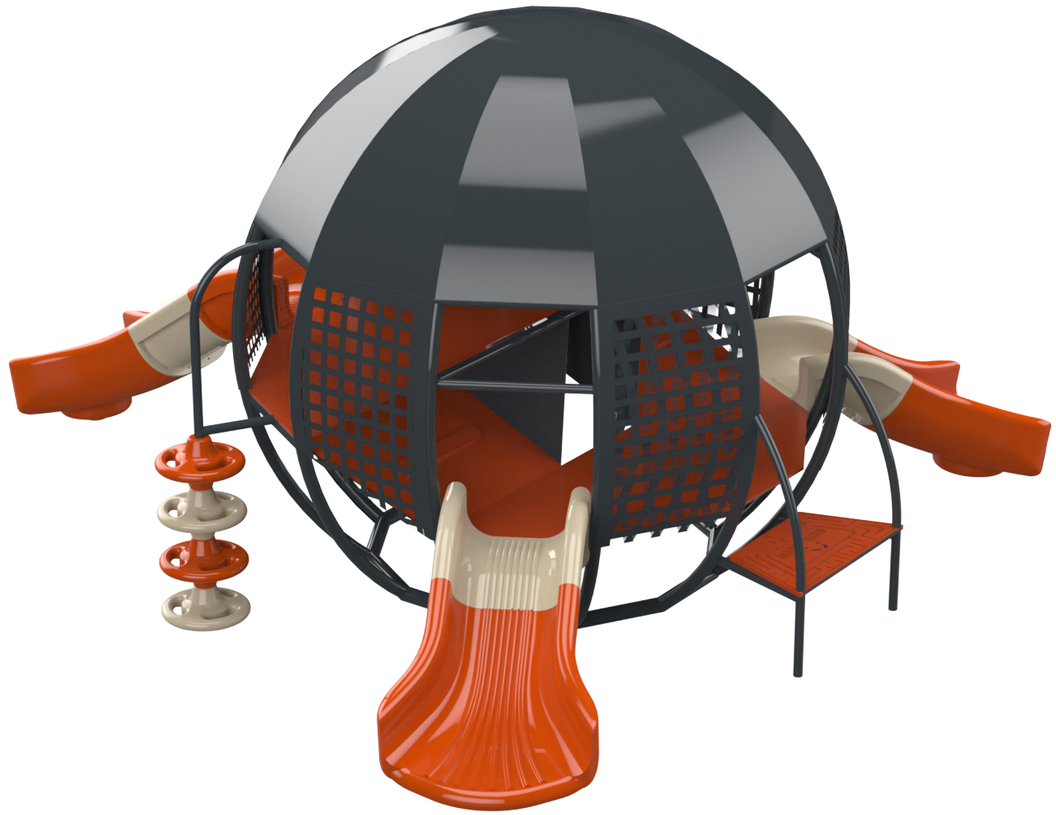

Motor Development

Foot-eye coordination - Improving coordination and balance through various equipment. Hand-eye coordination - Developing coordination and precision in activities requiring fine motor skills.

Cognitive Development

Spatial awareness- Improving the ability to understand and navigate space through mazes and courses..

Emotional Development

Imagination- Encouraging imagination and creating play worlds. Courage- Facing fears and new challenges. Confidence- Building self-confidence and belief in one's personal abilities. Independence- Developing independence and the ability to make personal decisions. Resilience- Coping with failure and trying again.

Social Development

Friendship creation- Creating friendships and strengthening social bonds.

Physical Development

Climbing - Strengthening arm and leg muscles, developing fitness and endurance Balancing- Improving balance and posture. Sliding - Strengthening leg and arm muscles and improving coordination.