TSP-10984

Lil Witch House 2

HDPE inclusive toddler extreme stainless steel play system model Lil Witch House 2

Recycled HDPE:

Stainless Steel 316:

Rope Cables:

Balancing Climbing Swinging Sliding



Ages 2-5 | Users 45 | Dimensions L: 28'-8.8" W: 13'-2.2" H: 10' | cm L: 898 W: 412 H: 315 | Safety Zone 24'-0.2"/39'-1.2" | cm 732/ 1191 | Fall Height 3'-6.2" | 110 cm

The Lil Witch House 2 is designed in the international Sloppy style, combining unconventional and slightly disheveled design with elements from the world of fairy tales, creating a unique and interesting look. The structure includes two cabin-like buildings connected by a challenging cable bridge. Children can climb to each cabin via a sturdy cable net and slide back down through designed HDPE slides. The structure is intended for young children and provides them with a play experience that challenges their imagination and physical abilities.

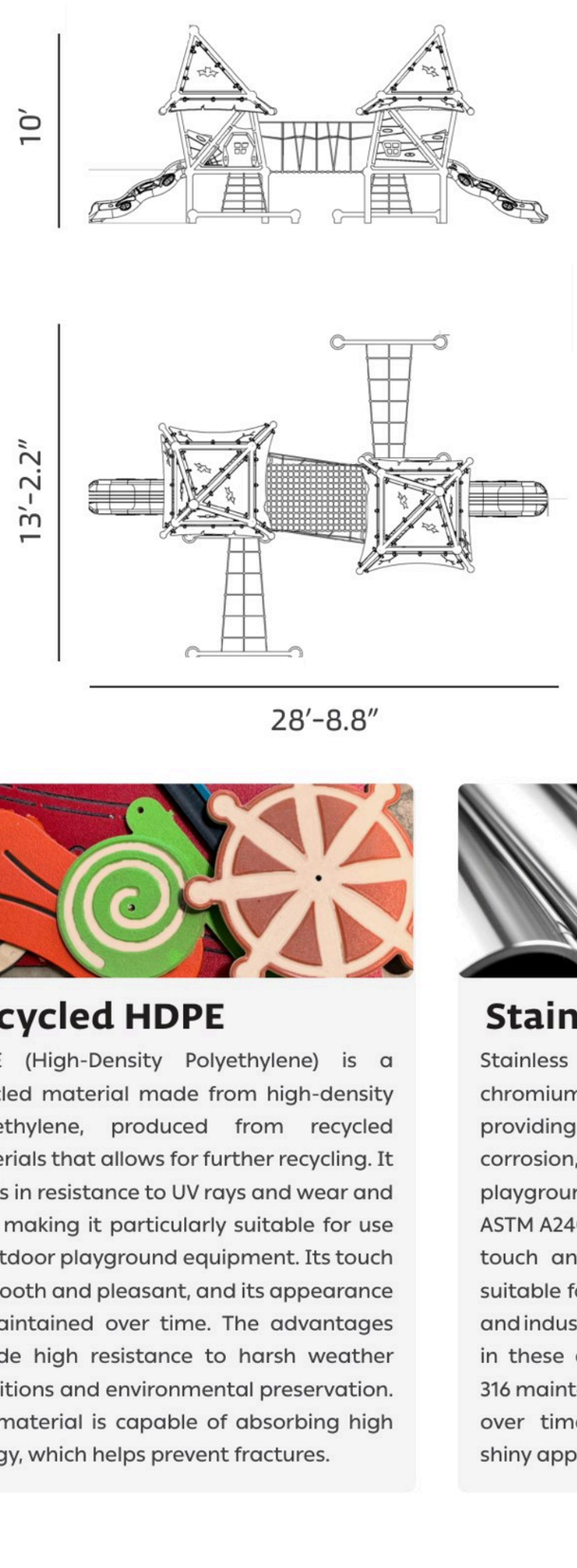

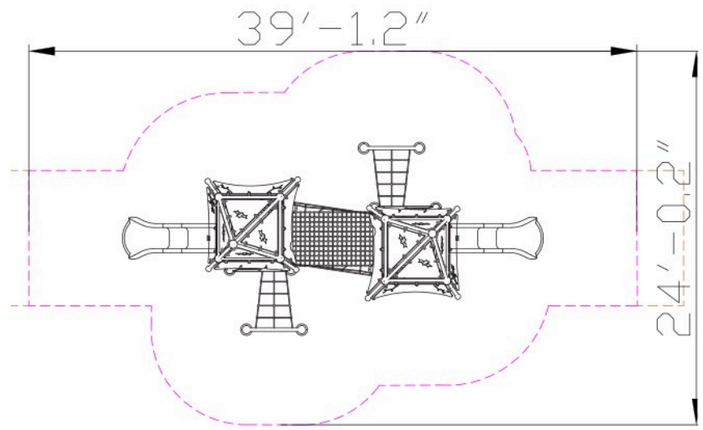



Recycled HDPE

HDPE (High-Density Polyethylene) is a recycled material made from high-density polyethylene, produced from recycled materials that allows for further recycling. It excels in resistance to UV rays and wear and tear, making it particularly suitable for use in outdoor playground equipment. Its touch is smooth and pleasant, and its appearance is maintained over time. The advantages include high resistance to harsh weather conditions and environmental preservation. The material is capable of absorbing high energy, which helps prevent fractures.



Stainless Steel 316

Stainless Steel 316 is an alloy of iron, chromium, nickel, and molybdenum, providing exceptional resistance to corrosion, rust, and stains. It meets strict playground equipment standards such as ASTM A240 and EN 10088, offering a smooth touch and shiny appearance. Particularly suitable for use in coastal and humid areas, and industrial and urban environments. Even in these challenging areas, Stainless Steel 316 maintains a clean and shiny appearance over time.Steel 316 maintains a clean and shiny appearance over time.



Rope Cables

Rope Cables are made of synthetic polypropylene (PP) fibers combined with a galvanized steel core for improved strength and durability. They meet strict standards, such as ASTM A240 and EN 10088, ensuring durability and safety for use in playground equipment. . The cables offer a soft and pleasant touch that does not harm the hands during use and are available in various diameters and colors, allowing for creative and aesthetic design.for creative and aesthetic design.



Designed Roof

The designed roof adds an aesthetic and interesting element to the play structure, providing shade and protection from the sun and rain. In addition to its functional role, the designed roof integrates with the story the play structure tells, enhancing the play experience. The roof design adds a dimension of imagination and creativity, allowing players to experience the structure as a magical and fascinating place, enhancing their enjoyment of the play.

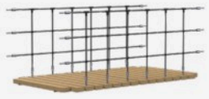

Straight Bridge

The straight bridge allows safe and convenient passage between parts of the structure, developing players' motor skills and balance. The height effect from the ground adds a sense of adventure and challenge as players learn to maintain stability and confidence during the crossing. Playing on the bridge encourages movement and self-confidence.



Toddler Slide

The toddler slide provides a safe and enjoyable sliding experience for little ones. It develops coordination, movement, balance, and self-confidence for young players.



Ventilation Window

A ventilation window provides a sense of openness and ventilates the structure, enhancing the play experience and adding an element of enjoyment and freshness. It also allows for maintaining eye contact between the player and companion, strengthening the sense of security.



Rope Ladder

The rope ladder provides vertical access to the play structure and encourages players to develop physical skills such as strength, coordination, and balance. Climbing the rope ladder strengthens hand and leg muscles and develops a sense of balance. The ladder encourages players to face challenges and develop flexibility and agility.



Climbing Element

The climbing element offers a physical challenge that develops muscle strength, coordination, and balance. Climbing on the element encourages children to overcome fears and build self-confidence and perseverance. Additionally, the element helps develop problem-solving skills as children look for efficient and safe ways to climb.



Overlays

Unique and designed visual elements that enhance the overall appearance of the structure. The overlays are durable and add an extra layer of creativity and enriching play experience for players.



Engravings

Engravings add designs and illustrations to parts of the structure, enriching the play experience with an interesting visual element.

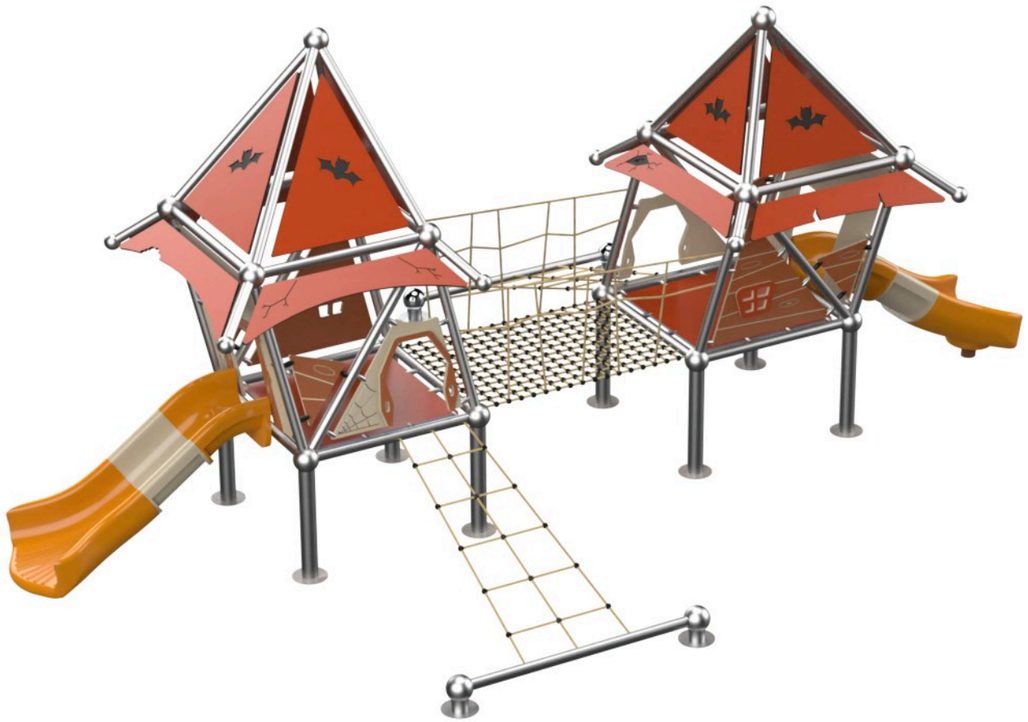

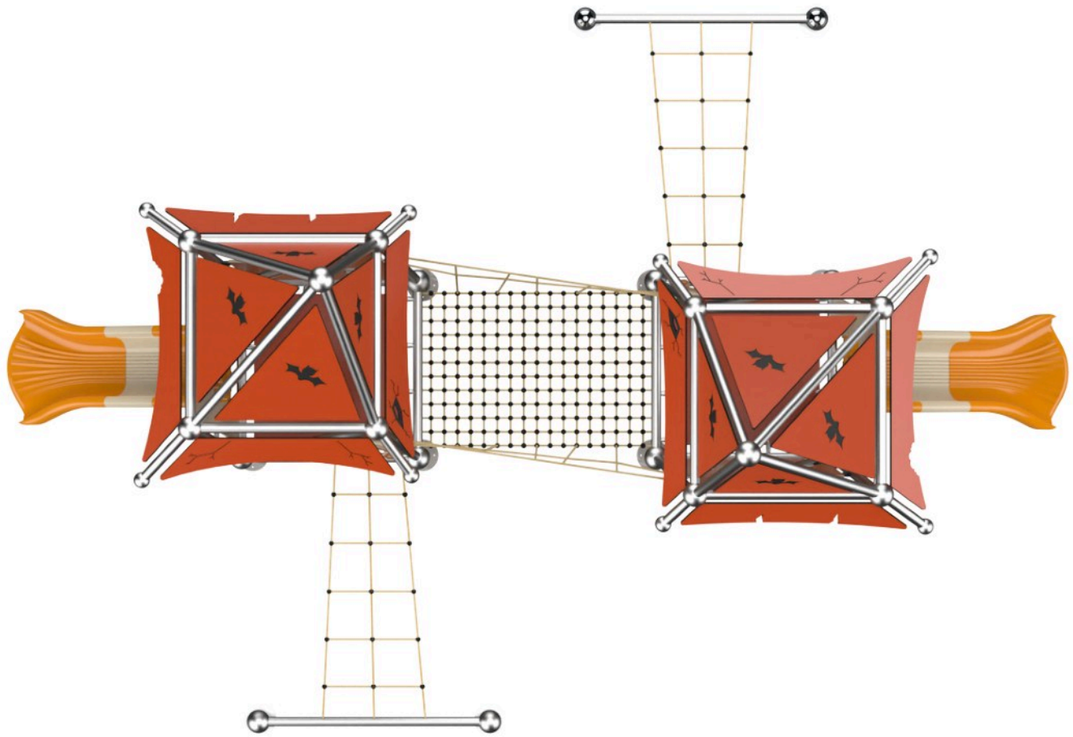

Motor Development

Foot-eye coordination - Improving coordination and balance through various equipment. Hand-eye coordination - Developing coordination and precision in activities .requiring fine motor skills

Cognitive Development

Concentration- Developing the ability to focus and maintain attention in equipment requiring concentration. Spatial awareness- Improving the ability to understand and navigate ..space through mazes and courses

Emotional Development

Imagination- Encouraging imagination and creating play worlds. Confidence- Building self-confidence and belief in one's personal abilities. Independence- Developing independence and the ability to make .personal decisions

Social Development

Friendship creation- Creating friendships and strengthening social bonds. Friendship creation- Creating friendships and .strengthening social bonds

Physical Development

Climbing - Strengthening arm and leg muscles, developing fitness and endurance Balancing- Improving balance and posture. Sliding - Strengthening leg and arm muscles .and improving coordination