# TSP-10984B

## Lil Witch House 1B

The Lil Witch House 1B is designed in the international Sloppy style, where the structures break conventions with a deliberately crooked and broken-looking design, with elements inspired by the world of fairy tales. This structure is specifically designed for toddlers and combines playful design with high functionality. It includes a low open slide at a height of 0.6 meters, accessible stairs, and a designed HDPE roof.

Recycled HDPE:

Stainless Steel 316:

Climbing

Sliding



Ages 2-5

Users 14

Dimensions L: 6'-10.6" W: 11'-9.3" H: 10'-1.4" | cm L: 215 W: 368 H: 317

Safety Zone 24'-2.3"/18'-9.2" | cm 737 / 572

Fall Height 1'-11" | 60 cm

Accessible



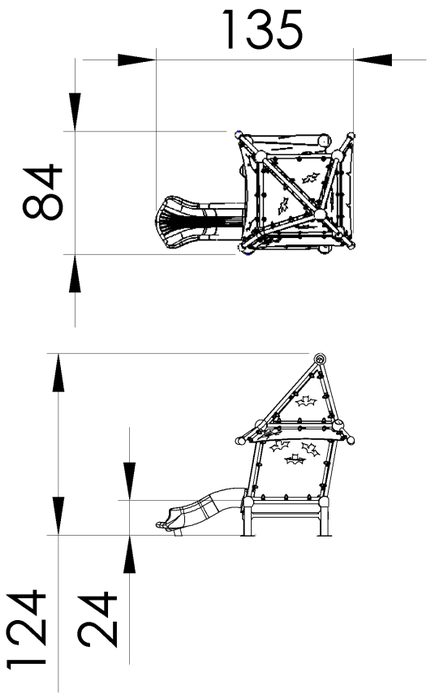


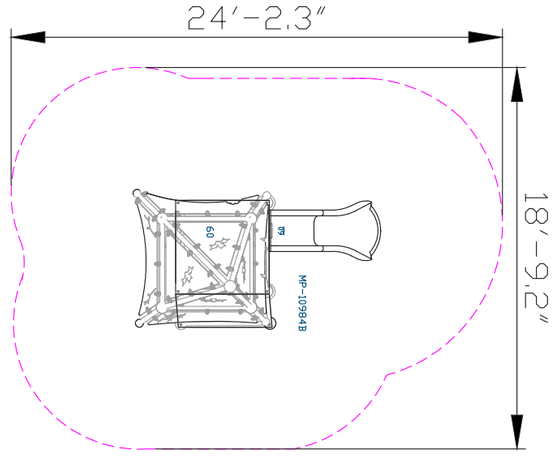




### Motor Development

Core muscle strengthening- Strengthening abdominal and back muscles through challenging equipment. Foot-eye coordination - Improving coordination and balance through various equipment. Hand-eye coordination - Developing coordination and precision in activities requiring fine motor skills.

### Cognitive Development

Curiosity - Encouraging exploration and discovery through equipment providing new and unfamiliar experiences. Creativity- Developing creative thinking and imagination in open and interactive play.

### Emotional Development

Imagination- Encouraging imagination and creating play worlds.  Confidence- Building self-confidence and belief in one's personal abilities. Independence- Developing independence and the ability to make personal decisions.

### Physical Development

Sliding - Strengthening leg and arm muscles and improving coordination. Climbing - Strengthening arm and leg muscles, developing fitness and endurance.



## Designed Roof

The designed roof adds an aesthetic and interesting element to the play structure, providing shade and protection from the sun and rain. In addition to its functional role, the designed roof integrates with the story the play structure tells, enhancing the play experience. The roof design adds a dimension of imagination and creativity, allowing players to experience the structure as a magical and fascinating place, enhancing their enjoyment of the play.



## Play Panel

The play panel provides a variety of interactive play options that develop players' motor and cognitive skills. Each panel offers a unique activity that stimulates thinking and encourages players to learn and discover more.



## Ventilation Window

A ventilation window provides a sense of openness and ventilates the structure, enhancing the play experience and adding an element of enjoyment and freshness. It also allows for maintaining eye contact between the player and companion, strengthening the sense of security.

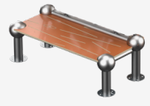

## Climbing Element

The climbing element offers a physical challenge that develops muscle strength, coordination, and balance. Climbing on the element encourages children to overcome fears and build self-confidence and perseverance. Additionally, the element helps develop problem-solving skills as children look for efficient and safe ways to climb.



## Overlays

Unique and designed visual elements that enhance the overall appearance of the structure. The overlays are durable and add an extra layer of creativity and enriching play experience for players.




## Engravings

Engravings add designs and illustrations to parts of the structure, enriching the play experience with an interesting visual element.



## Recycled HDPE

HDPE (High-Density Polyethylene) is a recycled material made from high-density polyethylene, produced from recycled materials that allows for further recycling. It excels in resistance to UV rays and wear and tear, making it particularly suitable for use in outdoor playground equipment. Its touch is smooth and pleasant, and its appearance is maintained over time. The advantages include high resistance to harsh weather conditions and environmental preservation. The material is capable of absorbing high energy, which helps prevent fractures.



## Stainless Steel 316

Stainless Steel 316 is an alloy of iron, chromium, nickel, and molybdenum, providing exceptional resistance to corrosion, rust, and stains. It meets strict playground equipment standards such as ASTM A240 and EN 10088, offering a smooth touch and shiny appearance. Particularly suitable for use in coastal and humid areas, and industrial and urban environments. Even in these challenging areas, Stainless Steel 316 maintains a clean and shiny appearance over time.Steel 316 maintains a clean and shiny appearance over time.