TSP-10991

Sedona

Toddler play system model Sedona

Recycled HDPE:

Steel:

Climbing

Sliding

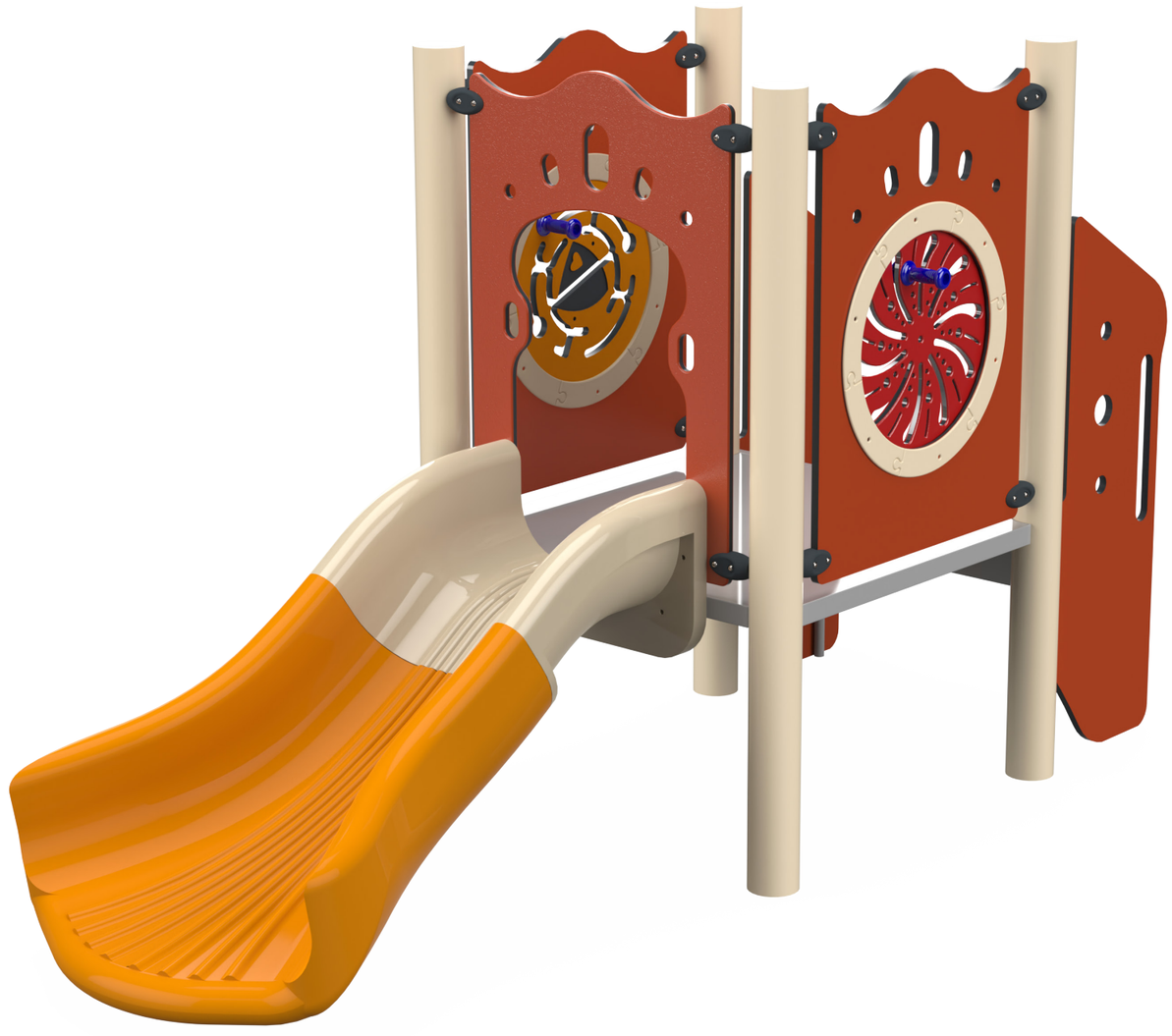

Ages 2-5

Users 9

Dimensions L: 3'-7.8" W: 9'-7.6" H:5'-5.3" | cm L: 114 W: 301 H: 170

Safety Zone 16'-1.4"/22'-4.3" | cm 490 / 681

Fall Height 1'-11" | 60 cm

Accessible

The Sedona is an inclusive play structure for toddlers, designed to provide an enjoyable and safe play experience for young children. The structure includes an accessible toddler slide, accessible stairs, and play panels that invite the little ones to explore, play, and develop their motor and social skills. Sedona's design is specially adapted to the needs of toddlers, with emphasis on full accessibility and maximum safety, making it an ideal place for play and learning in a supportive and imagination-stimulating environment.

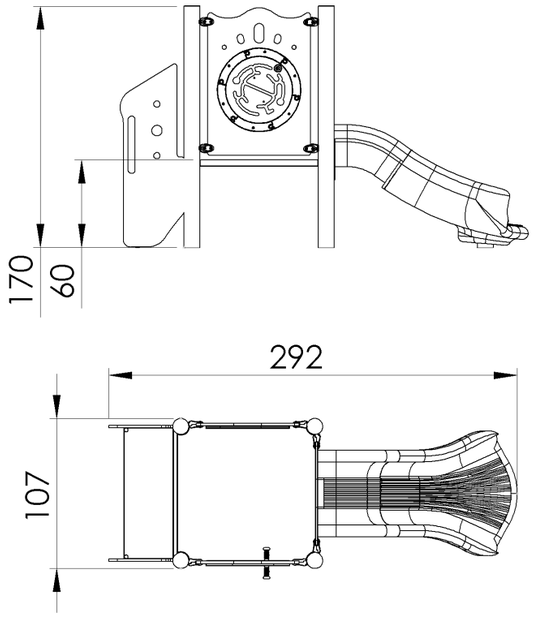

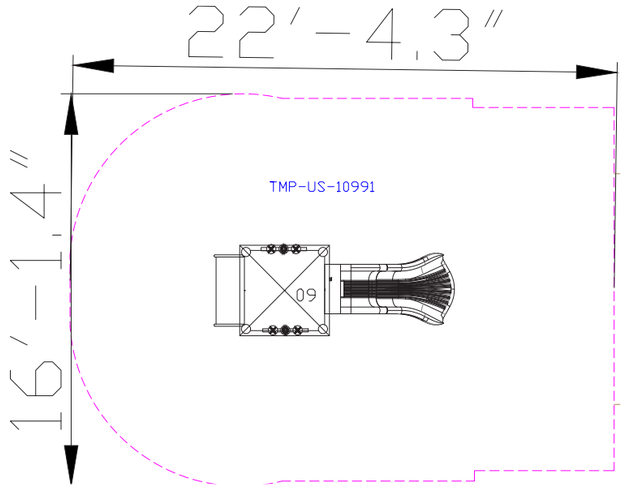



Motor Development

Foot-eye coordination - Improving coordination and balance through various equipment. Hand-eye coordination - Developing coordination and precision in activities .requiring fine motor skills

Physical Development

Climbing - Strengthening arm and leg muscles, developing fitness and endurance Sliding - Strengthening leg and arm muscles and improving .coordination

Emotional Development

Curiosity - Encouraging exploration and discovery through equipment providing new and unfamiliar .experiences

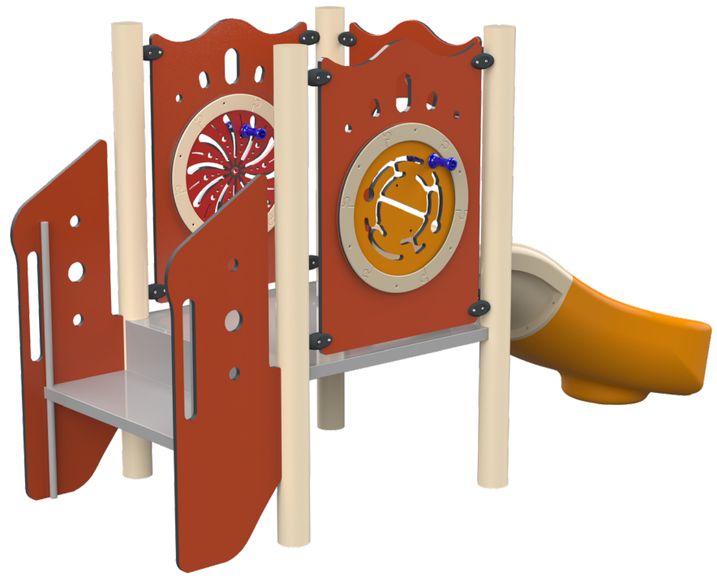



Toddler Slide

The toddler slide provides a safe and enjoyable sliding experience for little ones. It develops coordination, movement, balance, and self-confidence for young players.



Play Panel

The play panel provides a variety of interactive play options that develop players' motor and cognitive skills. Each panel offers a unique activity that stimulates thinking and encourages players to learn and discover more.



Climbing Element

The climbing element offers a physical challenge that develops muscle strength, coordination, and balance. Climbing on the element encourages children to overcome fears and build self-confidence and perseverance. Additionally, the element helps develop problem-solving skills as children look for efficient and safe ways to climb.

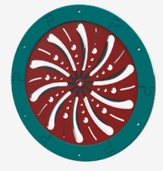

Play Panel

The play panel provides a variety of interactive play options that develop players' motor and cognitive skills. Each panel offers a unique activity that stimulates thinking and encourages players to learn and discover more.

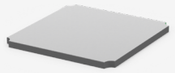

Tread Surface

The tread surface provides support and safety during play on the structure. The surface is designed to prevent slipping and improve players' stability and security.



Connectors

The connectors in our play structures are designed to securely and safely join parts of the structure. They are made of durable and high-quality materials, ensuring long-term durability without wear.



Recycled HDPE

HDPE (High-Density Polyethylene) is a recycled material made from high-density polyethylene, produced from recycled materials that allows for further recycling. It excels in resistance to UV rays and wear and tear, making it particularly suitable for use in outdoor playground equipment. Its touch is smooth and pleasant, and its appearance is maintained over time. The advantages include high resistance to harsh weather conditions and environmental preservation. The material is capable of absorbing high energy, which helps prevent fractures.



Steel

Steel structure that is strong and durable, oven-painted galvanized and coated with lead-free polyester powder for corrosion and rust resistance. The steel meets strict EN 1176 standards, ensuring high quality and safety. The steel is anti-vandalistic, requires minimal maintenance, and is fully recyclable. The high-quality paint ensures weather resistance and maintains a new appearance over time.