TSP-2213-2

Surfer

HDPE seesaw model Surfer

Recycled HDPE:

Steel:

Balancing

Swinging



Ages 5-12

Users 2

Dimensions L: 2' W: 5'-12" H: 6' | cm L: 64 W: 160 H: 190

Safety Zone 13'-3.4"/16'-9.8" | cm 403.86 / 510.54

Fall Height 3'-2" | 100 cm

Accessible

The Surfer play structure features a playful metal surfboard design mounted on a stainless-steel bearing. It is suitable for swinging and jumping games, fostering and developing balance and imagination.

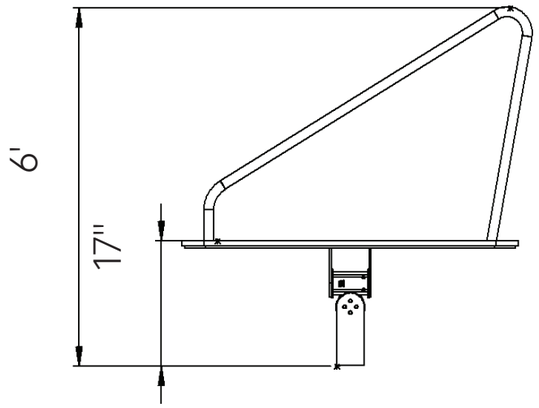

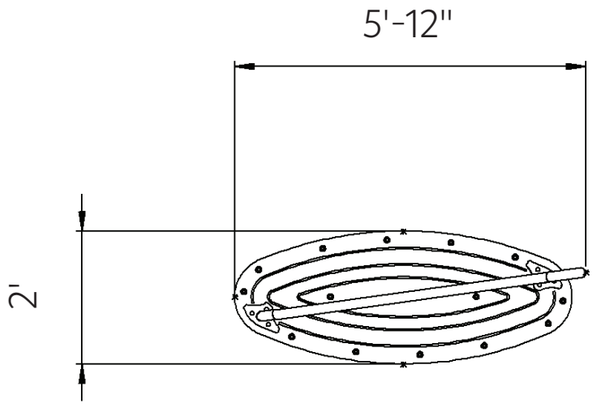





Steel

Steel structure that is strong and durable, oven-painted galvanized and coated with lead-free polyester powder for corrosion and rust resistance. The steel meets strict EN 1176 standards, ensuring high quality and safety. The steel is anti-vandalistic, requires minimal maintenance, and is fully recyclable. The high-quality paint ensures weather resistance and maintains a new appearance over time.



Recycled HDPE

HDPE (High-Density Polyethylene) is a recycled material made from high-density polyethylene, produced from recycled materials that allows for further recycling. It excels in resistance to UV rays and wear and tear, making it particularly suitable for use in outdoor playground equipment. Its touch is smooth and pleasant, and its appearance is maintained over time. The advantages include high resistance to harsh weather conditions and environmental preservation. The material is capable of absorbing high energy, which helps prevent fractures.

Engravings

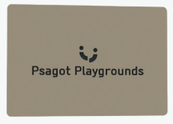

Engravings add designs and illustrations to parts of the structure, enriching the play experience with an interesting visual element.

Fitness Element



The fitness element allows players to develop their physical fitness through various activities such as climbing, pushing, and pulling. It encourages improvements in strength, endurance, and coordination, while emphasizing enjoyable and challenging physical activity.

Hand and Foot Holds



Hand and foot holds provide support during play and use of the structure. Players develop their strength and coordination while maintaining stability and security.

Rosta Bearing



A special bearing that allows for smooth movement and fun in the structure.



Motor Development

Foot-eye coordination - Improving coordination and balance through various equipment.



Cognitive Development

Spatial awareness- Improving the ability to understand and navigate space through mazes and courses.. Regulation of force- Developing the ability to apply the right amount of force according to the activity.



Social Development

Cooperation- Encouraging joint work and reaching shared goals. Communication- Developing effective and clear communication skills with playmates. Leadership- Providing opportunities for leadership development and group leading. Teamwork- Encouraging teamwork and developing group work skills.



Physical Development

Balancing- Improving balance and posture. Swinging - Strengthening core muscles and enhancing the sense of movement.