TSP-2230A

Coconut A

Metal seesaw for two-person up-and-down and balance play, made of galvanized metal and HDPE. The seesaw has two seats and handrails. Develops communication skills, self-confidence, and balance.

Recycled HDPE:

Steel:





Balancing

Swinging

Ages 5-12

Users 2

Dimensions L: 1'-28" W: 5' H: 3'-45" | cm L: 40 W: 157 H: 108

Safety Zone 17'-7.1"/14'-1.9" | cm 535.94 / 429.26

Fall Height 3'-2" | 100 cm

Accessible

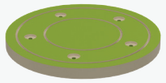

Seat

A seat that provides a small resting station during play where players can sit and rest. Suitable for short breaks or extended stays. Playing on the seat allows players to take a break from physical activity while maintaining connection with the environment and continuing social interactions.



Hand and Foot Holds

Hand and foot holds provide support during play and use of the structure. Players develop their strength and coordination while maintaining stability and security.



Rosta Bearing

A special bearing that allows for smooth movement and fun in the structure.



Stainless Steel 316

Stainless Steel 316 is an alloy of iron, chromium, nickel, and molybdenum, providing exceptional resistance to corrosion, rust, and stains. It meets strict playground equipment standards such as ASTM A240 and EN 10088, offering a smooth touch and shiny appearance. Particularly suitable for use in coastal and humid areas, and industrial and urban environments. Even in these challenging areas, Stainless Steel 316 maintains a clean and shiny appearance over time.Steel 316 maintains a clean and shiny appearance over time.



Recycled HDPE

HDPE (High-Density Polyethylene) is a recycled material made from high-density polyethylene, produced from recycled materials that allows for further recycling. It excels in resistance to UV rays and wear and tear, making it particularly suitable for use in outdoor playground equipment. Its touch is smooth and pleasant, and its appearance is maintained over time. The advantages include high resistance to harsh weather conditions and environmental preservation. The material is capable of absorbing high energy, which helps prevent fractures.

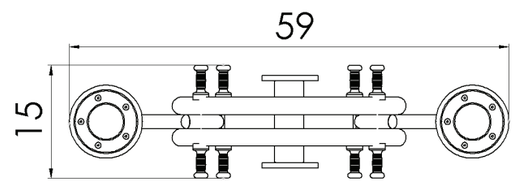

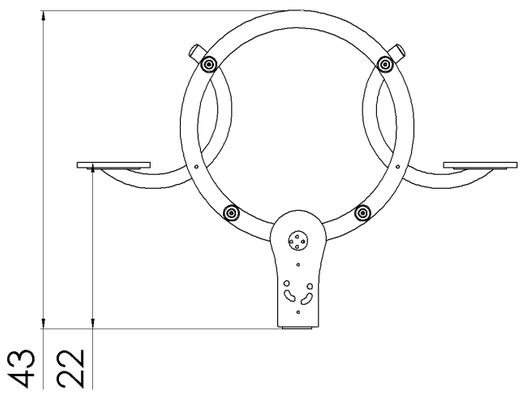

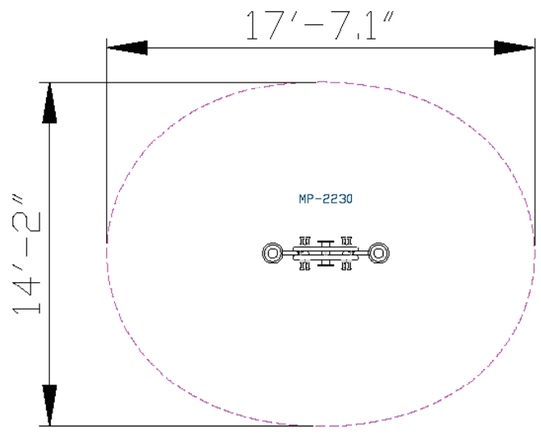

Motor Development

Hand-eye coordination - Developing coordination and precision in activities requiring fine motor skills.

Cognitive Development

Concentration- Developing the ability to focus and maintain attention in equipment requiring concentration. Regulation of force- Developing the ability to apply the right amount of force according to the activity.

Physical Development

Balancing- Improving balance and posture. Swinging - Strengthening core muscles and enhancing the sense of movement.