TSP-2247

Inclusive Mushroom Spring

Inclusive spring model Mushroom

Recycled HDPE:

Steel:

Hanging

Jumping

Swinging



Ages 2-5

Users 1

Dimensions L: 3'-68" W: 4' H: 3'-42" | cm L: 115 W: 127 H: 107

Safety Zone 16'-2.9"/16'-2.9" | cm 492.76 / 492.76

Fall Height 3'-2" | 100 cm

Accessible

Inclusive Mushroom Spring is an accessible play structure with a railing frame. Suitable for all users, even those with physical disabilities. Play difficulty can be adjusted by using holding on to the railing or going without, or jumping in place or jumping from the device onto an impact-absorbing surface. It features a powder-coated, galvanized metal frame and an engraved HDPE treading surface.

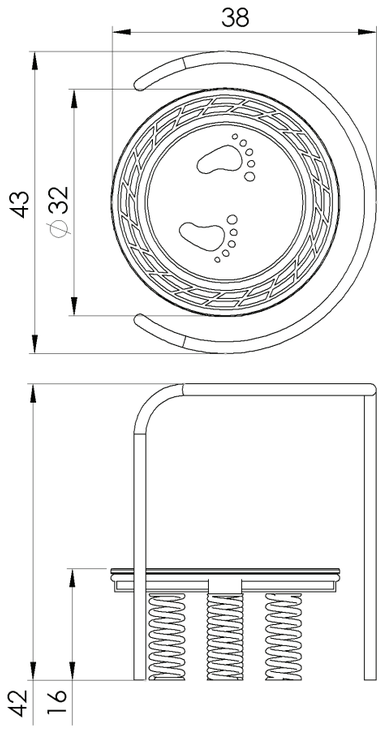

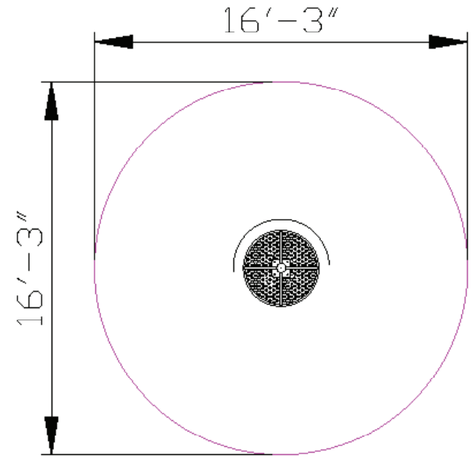





Steel

Steel structure that is strong and durable, oven-painted galvanized and coated with lead-free polyester powder for corrosion and rust resistance. The steel meets strict EN 1176 standards, ensuring high quality and safety. The steel is anti-vandalistic, requires minimal maintenance, and is fully recyclable. The high-quality paint ensures weather resistance and maintains a new appearance over time.



Recycled HDPE

HDPE (High-Density Polyethylene) is a recycled material made from high-density polyethylene, produced from recycled materials that allows for further recycling. It excels in resistance to UV rays and wear and tear, making it particularly suitable for use in outdoor playground equipment. Its touch is smooth and pleasant, and its appearance is maintained over time. The advantages include high resistance to harsh weather conditions and environmental preservation. The material is capable of absorbing high energy, which helps prevent fractures.

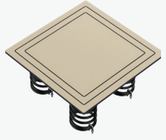

Springy Mat

The springy mat encourages players to jump and move. Playing on the springy mat develops players' strength, coordination, and balance.



Engravings

Engravings add designs and illustrations to parts of the structure, enriching the play experience with an interesting visual element.



Springs

The springs are made of high-quality, durable materials, designed safely without pinching or entrapments. They allow for movement and rocking games, developing motor skills, spatial awareness, and a sense of balance.



Hand and Foot Holds

Hand and foot holds provide support during play and use of the structure. Players develop their strength and coordination while maintaining stability and security.



Motor Development

Core muscle strengthening- Strengthening abdominal and back muscles through challenging equipment.



Cognitive Development

Regulation of force- Developing the ability to apply the right amount of force according to the activity.



Emotional Development

Confidence- Building self-confidence and belief in one's personal abilities. Independence- Developing independence and the ability to make personal decisions.



Social Development

Empathy- Developing empathy and the ability to understand and empathize with others' feelings. Respect for boundaries- Learning the importance of respecting personal and social boundaries. Empathy- Developing empathy and the ability to understand and empathize with others' feelings. Respect for boundaries- Learning the importance of respecting personal and social boundaries.



Physical Development

Balancing- Improving balance and posture.