TSP-2253A

Horse Spring A

HDPE spring model Horse A

Recycled HDPE:

Steel:

Balancing

Swinging



Ages 2-5

User 1

Dimensions L: 3W-2.4 W: 8.4" H: 2'-10.6" | cm L: 100 W: 22 H: 90

Safety Zone 12'-9.4"/15'-3.4" | cm 465/ 389

Fall Height 3'-2.4" | 100 CM

Accessible

Single seat HDPE horse with a galvanized, rolled, and painted metal spring at its base.

The rocking experience that the spring allows is beloved by young children due to the rhythmic and cyclical movement, and many children integrate role-play of galloping and dashing into the experience.

The use of the equipment is suitable for one child at a time, so children also gain an important lesson in delayed gratification while waiting for their turn and in consideration for others when using the equipment.

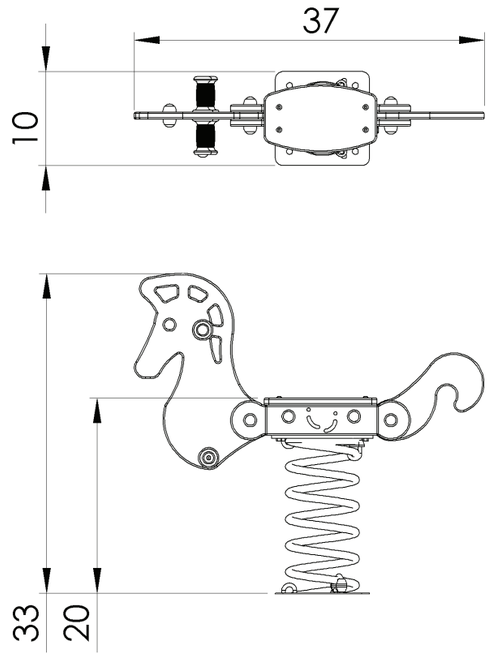

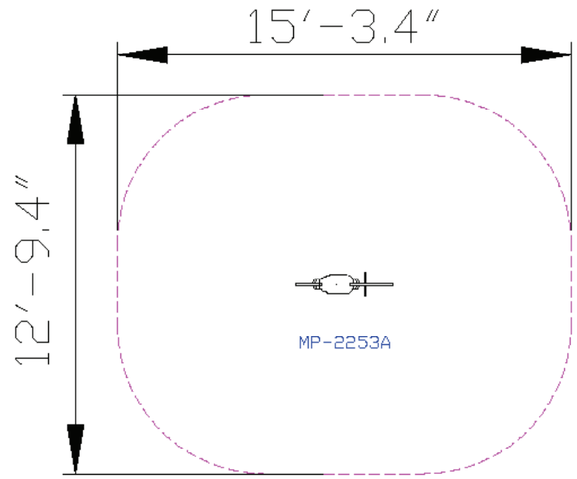





Steel

Steel structure that is strong and durable, oven-painted galvanized and coated with lead-free polyester powder for corrosion and rust resistance. The steel meets strict EN 1176 standards, ensuring high quality and safety. The steel is anti-vandalistic, requires minimal maintenance, and is fully recyclable. The high-quality paint ensures weather resistance and maintains a new appearance over time.



Recycled HDPE

HDPE (High-Density Polyethylene) is a recycled material made from high-density polyethylene, produced from recycled materials that allows for further recycling. It excels in resistance to UV rays and wear and tear, making it particularly suitable for use in outdoor playground equipment. Its touch is smooth and pleasant, and its appearance is maintained over time. The advantages include high resistance to harsh weather conditions and environmental preservation. The material is capable of absorbing high energy, which helps prevent fractures.



Hand and Foot Holds

Hand and foot holds provide support during play and use of the structure. Players develop their strength and coordination while maintaining stability and security.



Springs

The springs are made of high-quality, durable materials, designed safely without pinching or entrapments. They allow for movement and rocking games, developing motor skills, spatial awareness, and a sense of balance.



Seat

A seat that provides a small resting station during play where players can sit and rest. Suitable for short breaks or extended stays. Playing on the seat allows players to take a break from physical activity while maintaining connection with the environment and continuing social interactions.



Designed Panel

The designed panel adds an aesthetic and unique dimension to the playground equipment, enhancing the overall play experience. The panel allows players to feel part of a creative and imaginative world, designed to align with the narrative of the playground. The design ensures easy and safe access to play activities, while maintaining a sense of security and enjoyment.



Motor Development

Core muscle strengthening- Strengthening abdominal and back muscles through challenging equipment.



Cognitive Development

Regulation of force- Developing the ability to apply the right amount of force according to the activity.



Emotional Development

Confidence- Building self-confidence and belief in one's personal abilities. Independence- Developing independence and the ability to make personal decisions.



Social Development

Empathy- Developing empathy and the ability to understand and empathize with others' feelings. Respect for boundaries- Learning the importance of respecting personal and social boundaries. Empathy- Developing empathy and the ability to understand and empathize with others' feelings. Respect for boundaries- Learning the importance of respecting personal and social boundaries.



Physical Development

Balancing- Improving balance and posture. Swinging - Strengthening core muscles and enhancing the sense of movement.