TSP-2307

Inclusive Merry-Go-Round

Wheelchair accessible carousel model Inclusive Merry-Go-Round

Recycled HDPE:

Steel:

Balancing

Rotation



Ages 5-12

Users 4

Dimensions L: 5'-15" W: 5'-15" H: 2'-4" | cm L: 161 W: 161 H: 75

Safety Zone 23'-3.3"/23'-3.3" | cm 708.66 / 708.66

Fall Height 3'-2" | 100 cm

Accessible

An accessible carousel made of metal and HDPE for spinning and spinning games. The Inclusive Merry-Go-Round integrates players with special needs with the rest of the population. The carousel's base is installed at floor level with a rubber connector facilitating smooth entry for those with disabilities, even without the help of an escort. The carousel is designed with soft rounded lines with a sweat-reducing finish. The carousel experience is essential for developing the vestibular system. It allows the user to practice balance and equilibrium, force regulation, and strengthens arm and pelvic muscles. By integrating those with special needs, the Inclusive Merry-Go-Round helps in bringing them closer, involving them, and connecting them with other players in the playground.

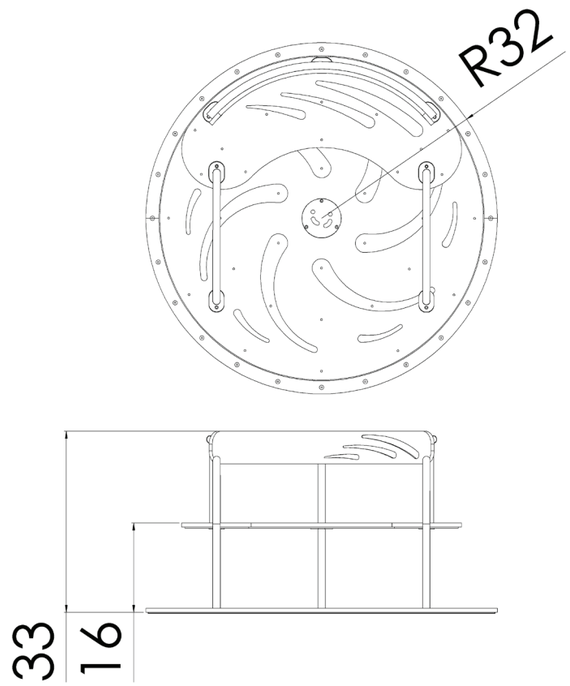

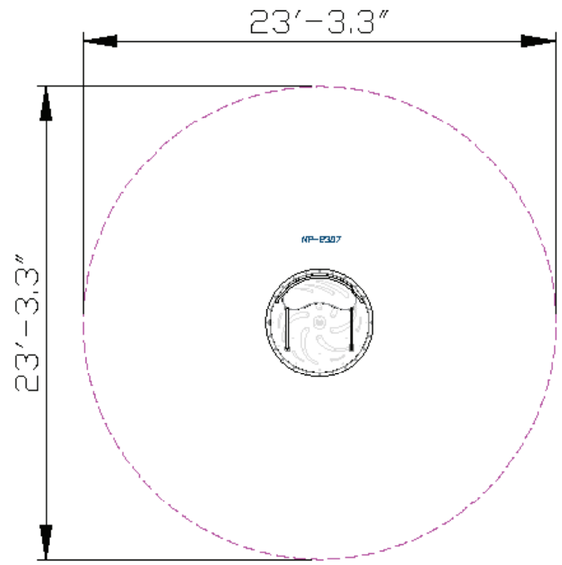





Recycled HDPE

HDPE (High-Density Polyethylene) is a recycled material made from high-density polyethylene, produced from recycled materials that allows for further recycling. It excels in resistance to UV rays and wear and tear, making it particularly suitable for use in outdoor playground equipment. Its touch is smooth and pleasant, and its appearance is maintained over time. The advantages include high resistance to harsh weather conditions and environmental preservation. The material is capable of absorbing high energy, which helps prevent fractures.



Steel

Steel structure that is strong and durable, oven-painted galvanized and coated with lead-free polyester powder for corrosion and rust resistance. The steel meets strict EN 1176 standards, ensuring high quality and safety. The steel is anti-vandalistic, requires minimal maintenance, and is fully recyclable. The high-quality paint ensures weather resistance and maintains a new appearance over time.



Tread Surface

The tread surface provides support and safety during play on the structure. The surface is designed to prevent slipping and improve players' stability and security.



Hand and Foot Holds

Hand and foot holds provide support during play and use of the structure. Players develop their strength and coordination while maintaining stability and security.



Seat

A seat that provides a small resting station during play where players can sit and rest. Suitable for short breaks or extended stays. Playing on the seat allows players to take a break from physical activity while maintaining connection with the environment and continuing social interactions.



Engravings

Engravings add designs and illustrations to parts of the structure, enriching the play experience with an interesting visual element.



Motor Development

Hand-eye coordination - Developing coordination and precision in activities requiring fine motor skills.



Cognitive Development

Concentration- Developing the ability to focus and maintain attention in equipment requiring concentration. Spatial awareness- Improving the ability to understand and navigate space through mazes and courses.. Regulation of force- Developing the ability to apply the right amount of force according to the activity.



Emotional Development

Courage- Facing fears and new challenges. Confidence- Building self-confidence and belief in one's personal abilities. Empathy- Developing the ability to understand and accept differences and complexities.



Social Development

Cooperation- Encouraging joint work and reaching shared goals. Communication- Developing effective and clear communication skills with playmates Teamwork- Encouraging teamwork and developing group work skills. Conflict resolution- Learning to resolve disputes and manage conflicts positively. Empathy- Developing empathy and the ability to understand and empathize with others' feelings.



Physical Development

Balancing- Improving balance and posture. Spinning - Improving balance and vestibular functions through carousels.