TSP-2308

Mega Hamster Wheel

Spinner model Mega Hamster Wheel

HPL:

Steel:

Balancing

Rotation

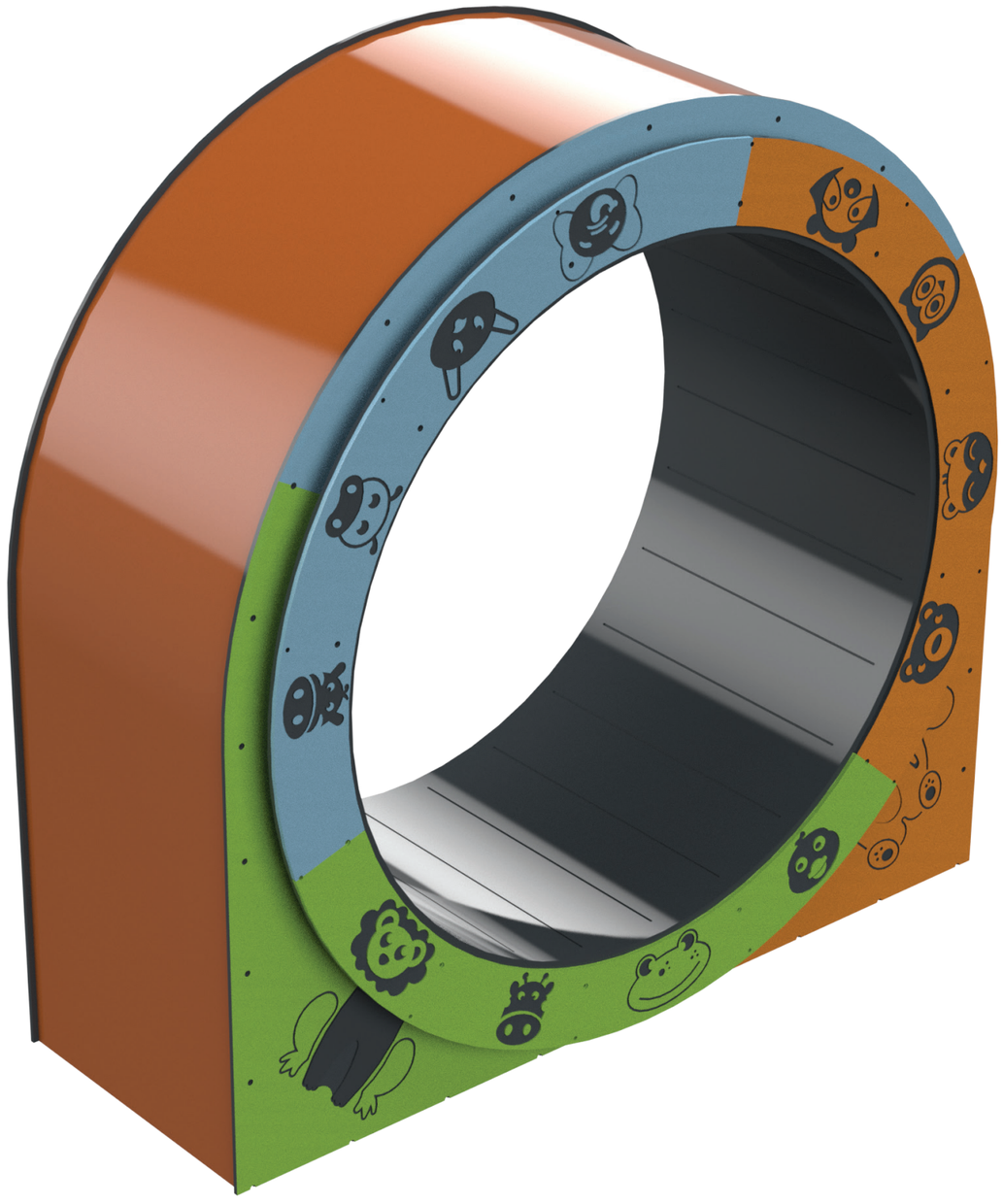

Ages 5-12

Users 4

Dimensions L: 2'-68" W: 7'-36" H: 7'-16" | cm L: 84 W: 230 H: 224

Safety Zone 19'-6.7"/14'-8.9" | cm 594.36 / 406.4

Fall Height 3'-2" | 100 cm

Accessible

Rotating drum carousel for an enjoyable and challenging spinning game. Similar to a hamster wheel, the player enters the 'drum' in a sitting, lying, or standing position and rotates up to 360 degrees by themselves or with help. A particularly immersive and funny device! Strengthens the vestibular system, balance, and posture.

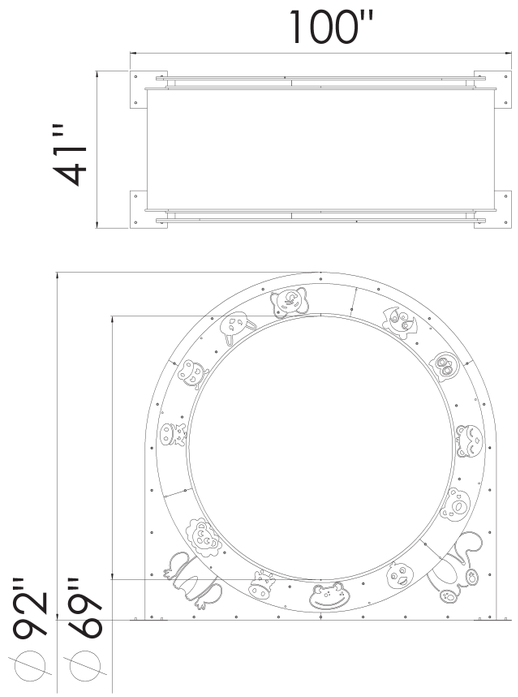

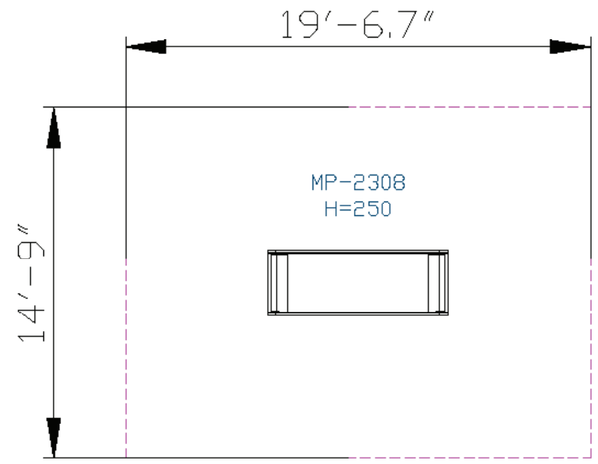





HPL

HPL panels are high-pressure laminate boards produced by saturating multiple layers of kraft paper with phenolic resin. These panels offer high resistance to abrasion, scratches, and chemical impacts, maintaining their quality in both outdoor and indoor conditions. Available in a variety of colors and textures, HPL panels are used for surfaces, walls, and furniture in playground equipment, providing an aesthetic appearance and requiring low maintenance.



Steel

Steel structure that is strong and durable, oven-painted galvanized and coated with lead-free polyester powder for corrosion and rust resistance. The steel meets strict EN 1176 standards, ensuring high quality and safety. The steel is anti-vandalistic, requires minimal maintenance, and is fully recyclable. The high-quality paint ensures weather resistance and maintains a new appearance over time.

Engravings

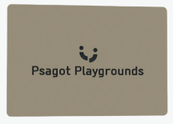

Engravings add designs and illustrations to parts of the structure, enriching the play experience with an interesting visual element.

Rotating Drum



The rotating drum provides an exciting spinning experience for players, similar to moving inside a hamster wheel. Players can run, walk, or crawl inside the drum while it spins, improving their motor skills, balance, and coordination. The spinning action develops spatial awareness and encourages players to control their movements and maintain stability during the spin.

Designed Panel



The designed panel adds an aesthetic and unique dimension to the playground equipment, enhancing the overall play experience. The panel allows players to feel part of a creative and imaginative world, designed to align with the narrative of the playground. The design ensures easy and safe access to play activities, while maintaining a sense of security and enjoyment.

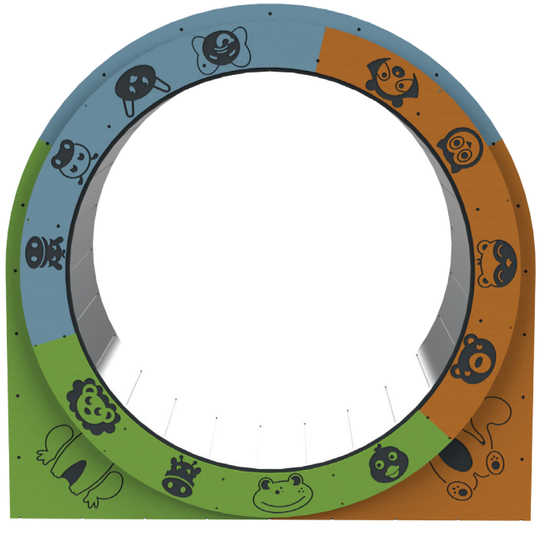



Motor Development

Foot-eye coordination - Improving coordination and balance through various equipment. Hand-eye coordination - Developing coordination and precision in activities requiring fine motor skills.



Cognitive Development

Concentration- Developing the ability to focus and maintain attention in equipment requiring concentration. Spatial awareness- Improving the ability to understand and navigate space through mazes and courses.. Regulation of force- Developing the ability to apply the right amount of force according to the activity.



Emotional Development

Courage- Facing fears and new challenges. Confidence- Building self-confidence and belief in one's personal abilities. Independence- Developing independence and the ability to make personal decisions. Patience- Practicing patience and waiting for one's turn.



Physical Development

Balancing- Improving balance and posture. Spinning - Improving balance and vestibular functions through carousels.



Social Development

Empathy- Developing empathy and the ability to understand and empathize with others' feelings. Respect for boundaries- Learning the importance of respecting personal and social boundaries. Empathy- Developing empathy and the ability to understand and empathize with others' feelings. Respect for boundaries- Learning the importance of respecting personal and social boundaries.