TSP-2309

Vortex

Spinner model Vortex

Balancing

Rotation



Ages 2-5

Users 1

Dimensions L: 2' W: 1'-98" H: 2'-11" | cm L: 64 W: 62 H: 66

Safety Zone 14'-0.8"/14'-0.8" | cm 426.72 / 426.72

Fall Height 3'-2" | 100 cm

Accessible

Carousel playset for spinning while seated. Suitable for movement and spinning games. Playing in Vortex helps develops posture and balance.





Cognitive Development

Concentration- Developing the ability to focus and maintain attention in equipment requiring concentration. Spatial awareness- Improving the ability to understand and navigate space through mazes and courses.. Regulation of force- Developing the ability to apply the right amount of force according to the activity.



Emotional Development

Courage- Facing fears and new challenges. Confidence- Building self-confidence and belief in one's personal abilities. Independence- Developing independence and the ability to make personal decisions.



Physical Development

Balancing- Improving balance and posture. Spinning - Improving balance and vestibular functions through carousels.

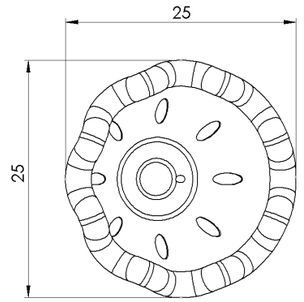

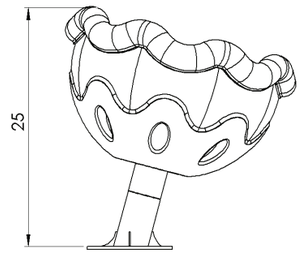

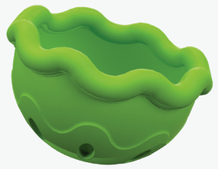

Seat

A seat that provides a small resting station during play where players can sit and rest. Suitable for short breaks or extended stays. Playing on the seat allows players to take a break from physical activity while maintaining connection with the environment and continuing social interactions.

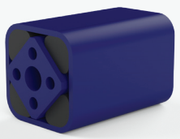

Rosta Bearing

A special bearing that allows for smooth movement and fun in the structure.

