TSP-2317B

Tornado

Spinner model Tornado

Recycled HDPE:

Steel:

Balancing

Rotation

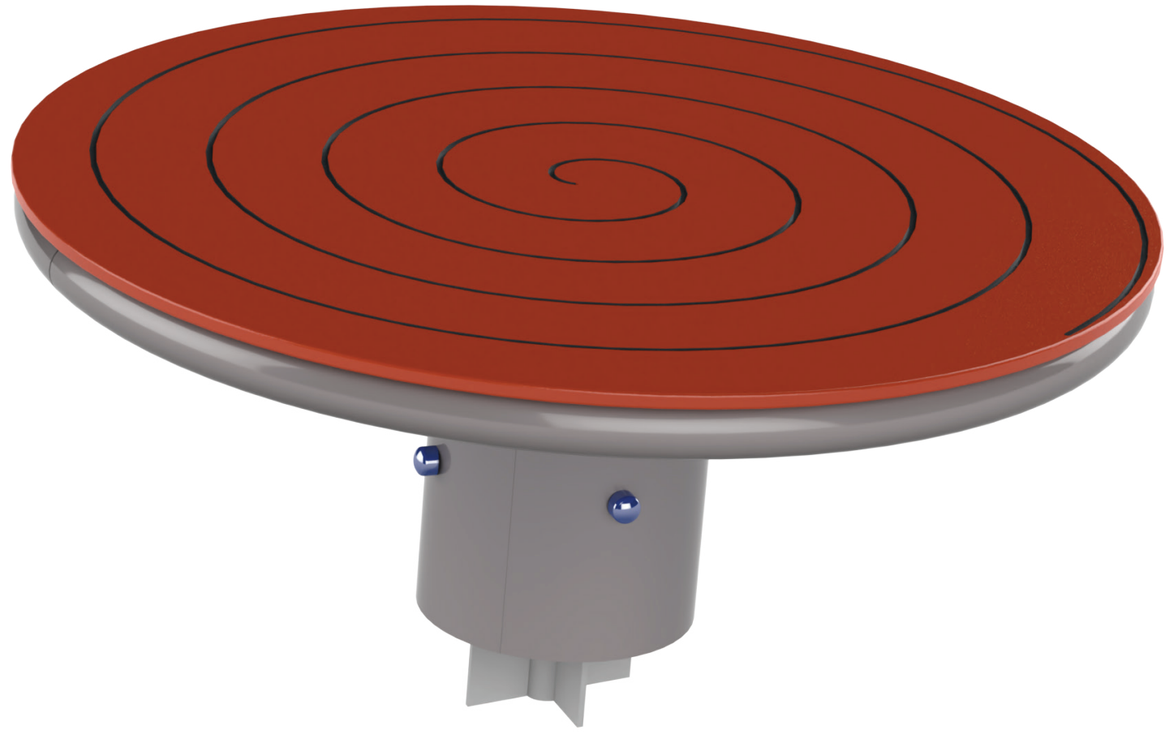

Ages 5-12

Users 8

Dimensions L: 5'-12" W: 5'-12" H: 2'-56" | cm L: 160 W: 160 H: 80

Safety Zone 23'-2.9"/23'-2.9" | cm 706.12 / 706.12

Fall Height 3'-2" | 100 cm

Accessible

A sloped plate carousel for movement, spinning and balance games. Playing on the rotating plate is challenging and empowering. It allows players to practice force regulation and balance, as well as developing social interaction.

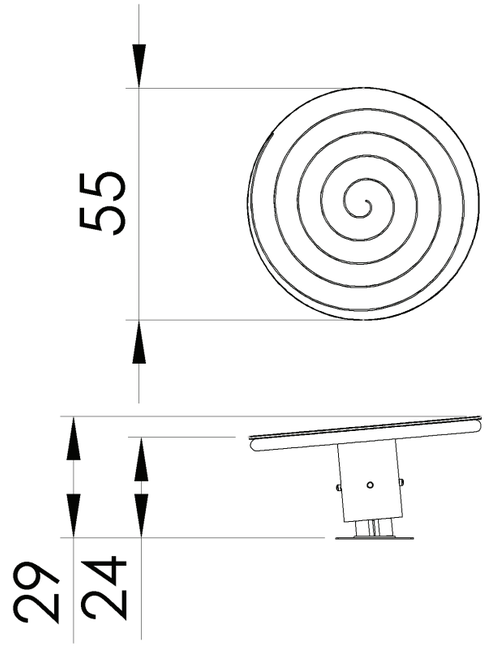

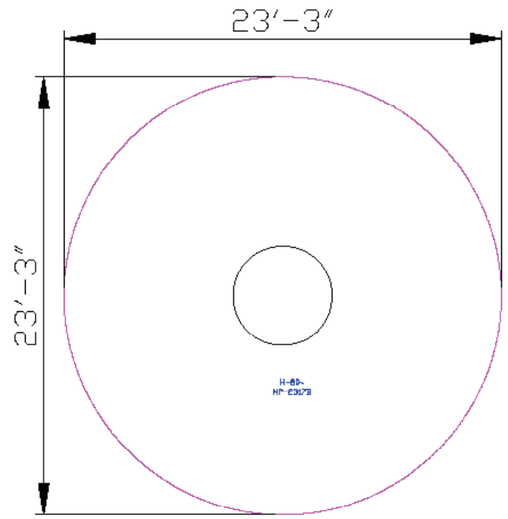





Recycled HDPE

HDPE (High-Density Polyethylene) is a recycled material made from high-density polyethylene, produced from recycled materials that allows for further recycling. It excels in resistance to UV rays and wear and tear, making it particularly suitable for use in outdoor playground equipment. Its touch is smooth and pleasant, and its appearance is maintained over time. The advantages include high resistance to harsh weather conditions and environmental preservation. The material is capable of absorbing high energy, which helps prevent fractures.



Steel

Steel structure that is strong and durable, oven-painted galvanized and coated with lead-free polyester powder for corrosion and rust resistance. The steel meets strict EN 1176 standards, ensuring high quality and safety. The steel is anti-vandalistic, requires minimal maintenance, and is fully recyclable. The high-quality paint ensures weather resistance and maintains a new appearance over time.

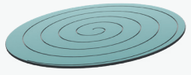

Tread Surface

The tread surface provides support and safety during play on the structure. The surface is designed to prevent slipping and improve players' stability and security.



Bearings

Bearings provide smooth and supported internal movement for the element. They ensure smooth and safe movements, enhancing the play experience by reducing friction and effort.

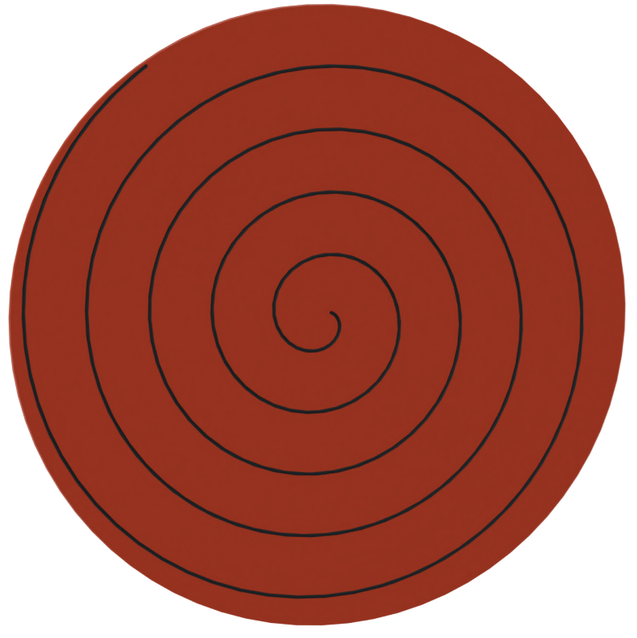



Motor Development

Foot-eye coordination - Improving coordination and balance through various equipment.



Cognitive Development

Concentration- Developing the ability to focus and maintain attention in equipment requiring concentration. Spatial awareness- Improving the ability to understand and navigate space through mazes and courses.. Regulation of force- Developing the ability to apply the right amount of force according to the activity.



Emotional Development

Courage- Facing fears and new challenges. Confidence- Building self-confidence and belief in one's personal abilities.



Social Development

Cooperation- Encouraging joint work and reaching shared goals. Communication- Developing effective and clear communication skills with playmates Leadership- Providing opportunities for leadership development and group leading. Teamwork- Encouraging teamwork and developing group work skills.



Physical Development

Balancing- Improving balance and posture. Spinning - Improving balance and vestibular functions through carousels.