TSP-2321

Barrel Roll

Vertical carousel playset, a nostalgic and beloved game with upgraded material composition. A coated drum carousel rotates on a horizontal axis with HDPE handrails on both sides for support. The player stands on the drum and rotates it using their legs. Develops balance, equilibrium and force regulation, as well as strengthening arm and leg muscles.

Steel:

Balancing Hanging Jumping



Ages 5-12 | Users 1 | Dimensions L: 2'-49" W: 1'-92" H: 4'-8" | cm L: 78 W: 60 H: 150 | Safety Zone 13'-11.6"/13'-11.6" | cm 424.18 / 424.18 | Fall Height 3'-2" | 100 cm | Accessible

Motor Development

Foot-eye coordination - Improving coordination and balance through various equipment. Hand-eye coordination - Developing coordination and precision in activities requiring fine motor skills.

Emotional Development

Courage- Facing fears and new challenges. Confidence- Building self-confidence and belief in one's personal abilities. Independence- Developing independence and the ability to make personal decisions. Patience- Practicing patience and waiting for one's turn.

Cognitive Development

Concentration- Developing the ability to focus and maintain attention in equipment requiring concentration. Spatial awareness- Improving the ability to understand and navigate space through mazes and courses.. Regulation of force- Developing the ability to apply the right amount of force according to the activity.

Physical Development

Balancing- Improving balance and posture. Spinning - Improving balance and vestibular functions through carousels.

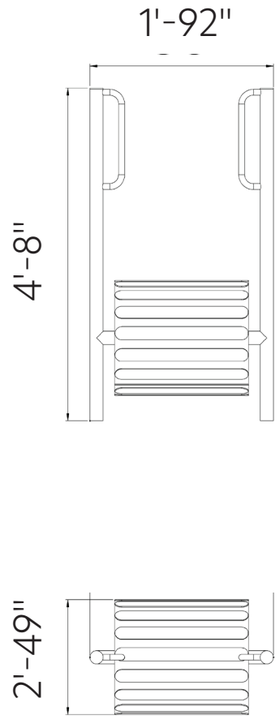

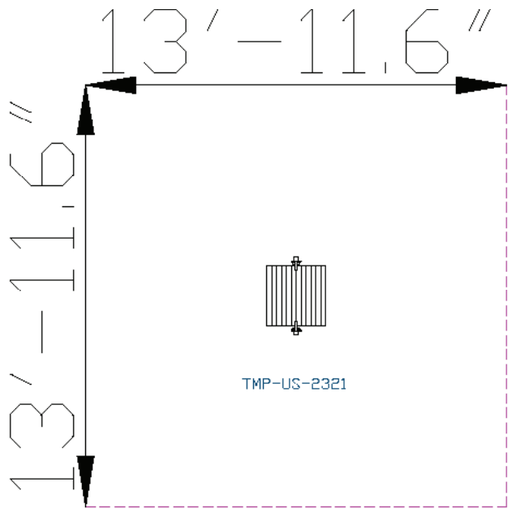





Steel

Steel structure that is strong and durable, oven-painted galvanized and coated with lead-free polyester powder for corrosion and rust resistance. The steel meets strict EN 1176 standards, ensuring high quality and safety. The steel is anti-vandalistic, requires minimal maintenance, and is fully recyclable. The high-quality paint ensures weather resistance and maintains a new appearance over time.



Hand and Foot Holds

Hand and foot holds provide support during play and use of the structure. Players develop their strength and coordination while maintaining stability and security.

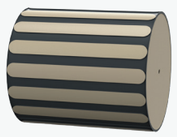

Rotating Drum

The rotating drum provides an exciting spinning experience for players, similar to moving inside a hamster wheel. Players can run, walk, or crawl inside the drum while it spins, improving their motor skills, balance, and coordination. The spinning action develops spatial awareness and encourages players to control their movements and maintain stability during the spin.