TSP-2402A FOREST
Forest Double Swing A

Forest double adult swing A

Recycled HDPE:

Steel:

Polycarbonate:

Balancing

Swinging



Ages 5-12

Users 2

Dimensions L: 6' W: 9'-6" H: 7'-36" | cm L: 300 W: 188 H: 230

Safety Zone 30'-2.2" / 10'-3.6" | cm 919 / 312

Fall Height 7' | 220 cm

Accessible

The swing set is one of the central and most beloved structures in any playground, offering a unique play experience that combines a sense of freedom, exhilaration and social interaction. Swinging provides children with a sense of excitement but can also be calming, all while helping to develop important motor skills such as balance and coordination.

A double-seat swing set from the Forest series, its design is inspired by nature, with colorful leaf crowns made of semi-transparent polycarbonate that add a magical and unique dimension to the playset.

Customer's choice in seats:

Toddler Seat: A rubber seat designed in a closed structure with a leg divider for safe use by young children. Suitable for seated infants up to the age of three.

3-and-Up Seat: A flat seat, suitable for children and adults, made from rubber for softening impacts.

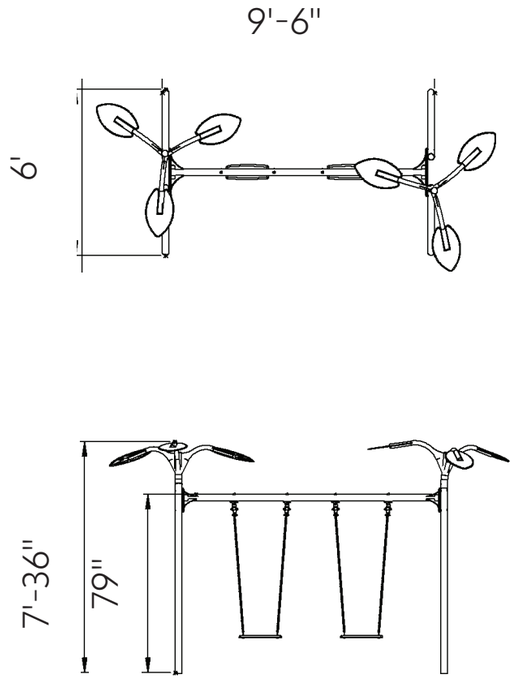

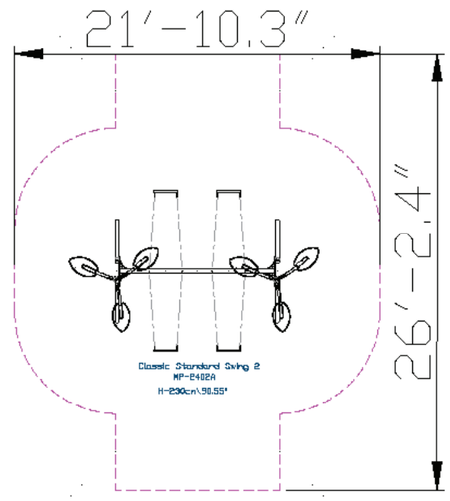





Steel

Steel structure that is strong and durable, oven-painted galvanized and coated with lead-free polyester powder for corrosion and rust resistance. The steel meets strict EN 1176 standards, ensuring high quality and safety. The steel is anti-vandalistic, requires minimal maintenance, and is fully recyclable. The high-quality paint ensures weather resistance and maintains a new appearance over time.



Polycarbonate

Colored polycarbonate is a durable, lightweight, and transparent thermoplastic polymer that complies with international standards such as EN 71 and ISO 179. It has a smooth touch, a glossy appearance, and is available in a variety of colors and transparencies. The material is used to create decorative elements in playground equipment, offering high impact resistance, UV protection, and great design flexibility



Swing Seat

The swing seat provides players with an enjoyable swinging experience. Swinging on the seat helps develop players' balance, coordination, and strength while enjoying outdoor activities. The seat is designed to offer maximum support and safety during the swinging motion.



Bearings

Bearings provide smooth and supported internal movement for the element. They ensure smooth and safe movements, enhancing the play experience by reducing friction and effort.



Decorations and Accessories

Decorations and accessories adorn the structures and highlight the theme of the playground. They encourage players to use their imagination and creativity during play.

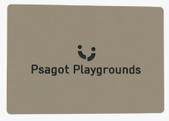

Engravings

Engravings add designs and illustrations to parts of the structure, enriching the play experience with an interesting visual element.



Cognitive Development

Regulation of force- Developing the ability to apply the right amount of force according to the activity.



Physical Development

Balancing- Improving balance and posture. Swinging - Strengthening core muscles and enhancing the sense of movement.



Social Development

Cooperation- Encouraging joint work and reaching shared goals. Communication- Developing effective and clear communication skills with playmates. Friendship creation- Creating friendships and strengthening social bonds.



Motor Development

Hand-eye coordination - Developing coordination and precision in activities requiring fine motor skills. Foot-eye coordination - Improving coordination and balance through various equipment.



Emotional Development

Courage- Facing fears and new challenges. Confidence- Building self-confidence and belief in one's personal abilities. Independence- Developing independence and the ability to make personal decisions. Resilience- Coping with failure and trying again.