TSP-2402A

Classic Double Swing A

Classic standard double adult swing A

Recycled HDPE:

Steel:

Balancing

Swinging

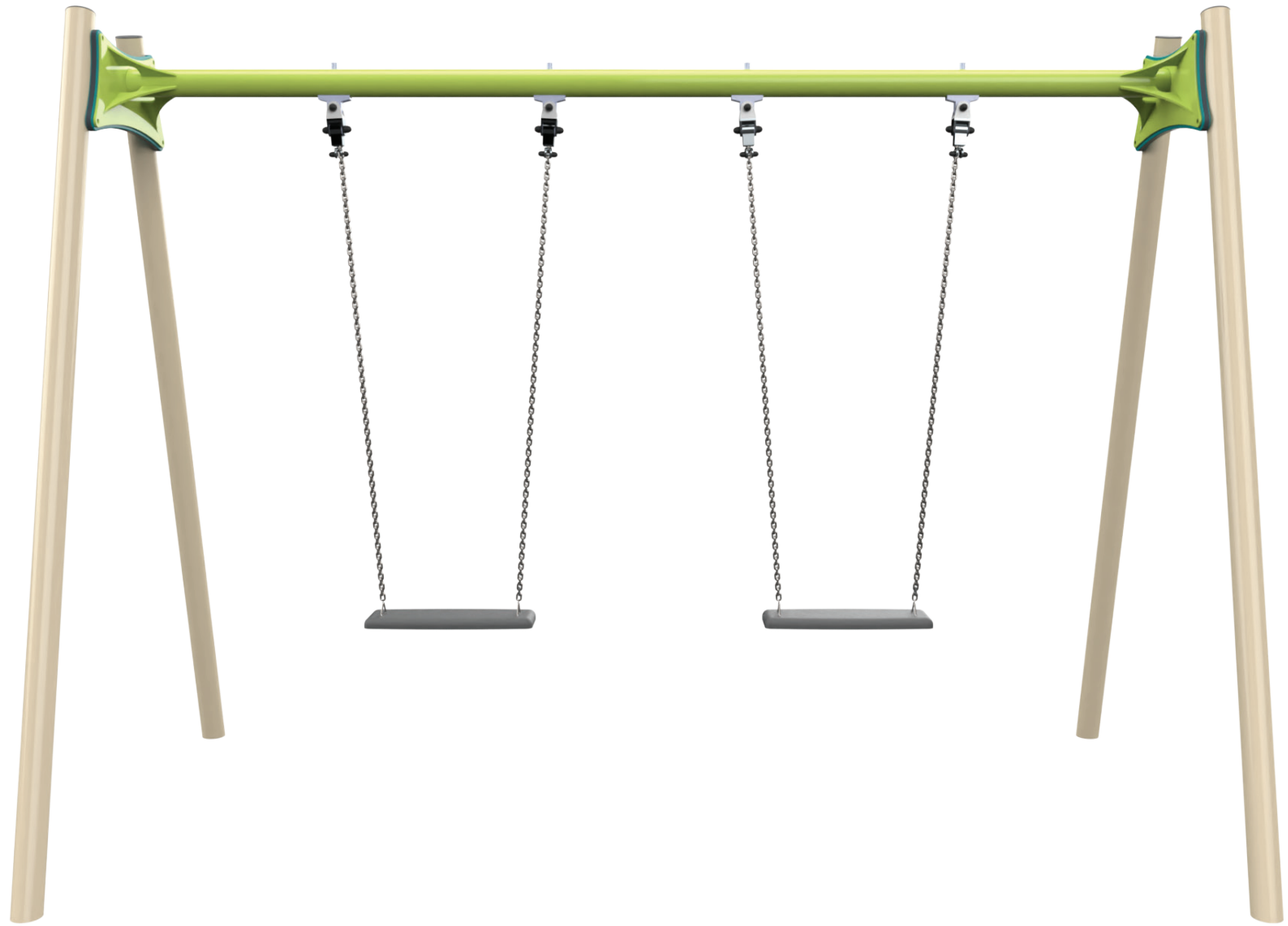

Ages 5-12

Users 2

Dimensions L: 6' W: 9'-6" H: 7' | cm L: 188 W: 300 H: 220

Safety Zone 26'-2.3" / 21'-10.3" | cm 797 / 665

Fall Height 7' | 220 cm

Accessible

The swing set is one of the central and most beloved structures in any playground. The joy of swinging, the sense of release, and the exhilarating motion are essential not only for joy but also significant in a child's development.

3-and-Up swing for two from the Classic series is a swing with a traditional A-Frame design, featuring two seats that are optimized for maximum comfort. The stable frame blends naturally into any playground, providing an enjoyable, safe, and calming swinging experience for both children and adults.

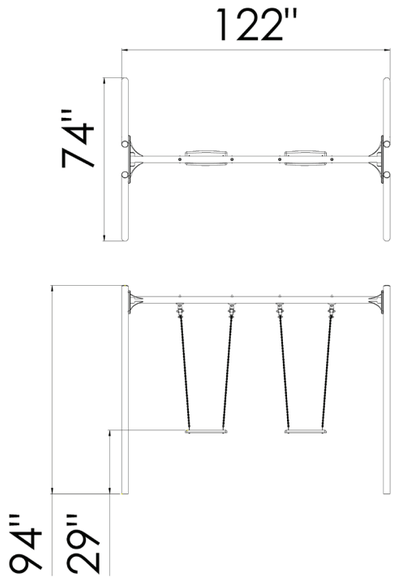

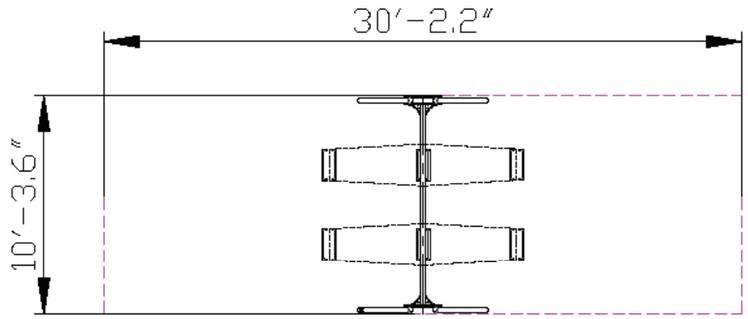





Steel

Steel structure that is strong and durable, oven-painted galvanized and coated with lead-free polyester powder for corrosion and rust resistance. The steel meets strict EN 1176 standards, ensuring high quality and safety. The steel is anti-vandalistic, requires minimal maintenance, and is fully recyclable. The high-quality paint ensures weather resistance and maintains a new appearance over time.



Recycled HDPE

HDPE (High-Density Polyethylene) is a recycled material made from high-density polyethylene, produced from recycled materials that allows for further recycling. It excels in resistance to UV rays and wear and tear, making it particularly suitable for use in outdoor playground equipment. Its touch is smooth and pleasant, and its appearance is maintained over time. The advantages include high resistance to harsh weather conditions and environmental preservation. The material is capable of absorbing high energy, which helps prevent fractures.



Swing Seat

The swing seat provides players with an enjoyable swinging experience. Swinging on the seat helps develop players' balance, coordination, and strength while enjoying outdoor activities. The seat is designed to offer maximum support and safety during the swinging motion.



Bearings

Bearings provide smooth and supported internal movement for the element. They ensure smooth and safe movements, enhancing the play experience by reducing friction and effort.

Chains

The chains in our play structures are made from high-quality, durable materials, ensuring safety and long-term use. They are designed to withstand harsh outdoor conditions. The chains are equipped with advanced security mechanisms that prevent disassembly and wear, ensuring a fun and safe play experience for all players.



Engravings

Engravings add designs and illustrations to parts of the structure, enriching the play experience with an interesting visual element.



Cognitive Development

Regulation of force- Developing the ability to apply the right amount of force according to the activity.



Physical Development

Balancing- Improving balance and posture. Swinging - Strengthening core muscles and enhancing the sense of movement.



Social Development

Cooperation- Encouraging joint work and reaching shared goals. Communication- Developing effective and clear communication skills with playmates. Friendship creation- Creating friendships and strengthening social bonds.



Motor Development

Hand-eye coordination - Developing coordination and precision in activities requiring fine motor skills. Foot-eye coordination - Improving coordination and balance through various equipment.



Emotional Development

Courage- Facing fears and new challenges. Confidence- Building self-confidence and belief in one's personal abilities. Independence- Developing independence and the ability to make personal decisions. Resilience- Coping with failure and trying again.