TSP-2412

Hovering Swing

The swing set is one of the central and most beloved structures in any playground, offering a unique play experience that combines a sense of freedom, exhilaration and social interaction.

Steel:

Rope Cables:





Balancing

Rotation

Swinging

Ages 5-12

Users 6

Dimensions L: 24'-48" W: 21'-24" H: 15'-74" | cm L: 765 W: 664 H: 492

Safety Zone 46'-2.4"R | cm 1407R

Fall Height 12'-8" | 400 cm

Accessible

Motor Development

Hand-eye coordination - Developing coordination and precision in activities requiring fine motor skills.

Cognitive Development

Regulation of force- Developing the ability to apply the right amount of force according to the activity.

Physical Development

Balancing- Improving balance and posture. Swinging - Strengthening core muscles and enhancing the sense of movement. Spinning - Improving balance and vestibular functions through carousels.

Emotional Development

Independence- Developing independence and the ability to make personal decisions. Patience- Practicing patience and waiting for one's turn.

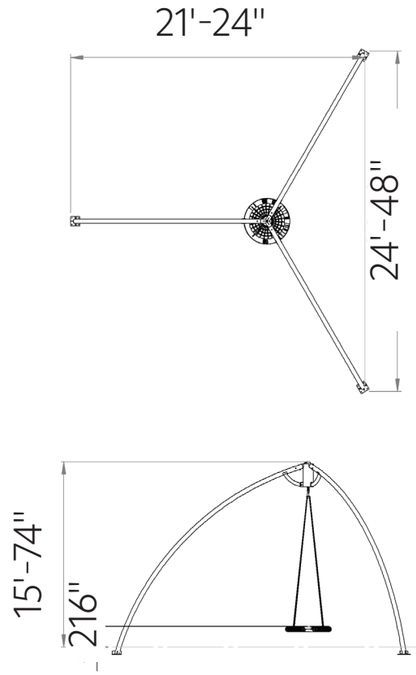

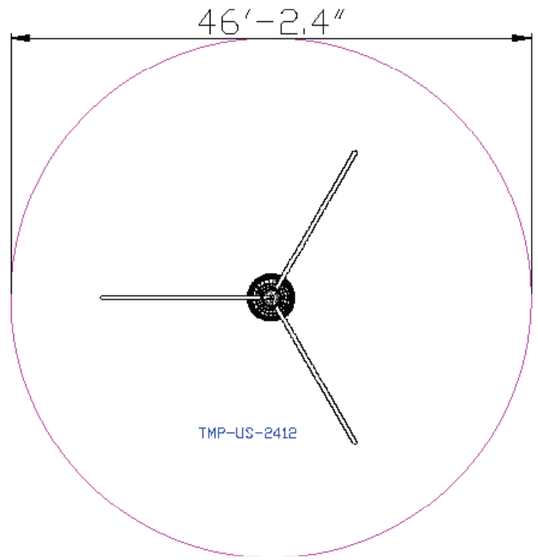



Steel

Steel structure that is strong and durable, oven-painted galvanized and coated with lead-free polyester powder for corrosion and rust resistance. The steel meets strict EN 1176 standards, ensuring high quality and safety. The steel is anti-vandalistic, requires minimal maintenance, and is fully recyclable. The high-quality paint ensures weather resistance and maintains a new appearance over time.



Rope Cables

Rope Cables are made of synthetic polypropylene (PP) fibers combined with a galvanized steel core for improved strength and durability. They meet strict standards such as MATI 1498/1497, ASTM A240, and EN 10088, ensuring durability and safety for use in playground equipment. The cables offer a soft and pleasant touch that does not harm the hands during use and are available in various diameters and colors, allowing for creative and aesthetic design.



Spinning Top

The spinning top offers an exciting and challenging spinning experience that develops players' motor skills and balance. Playing with the spinning top encourages movement, coordination, and self-confidence.



Connectors

The connectors in our play structures are designed to securely and safely join parts of the structure. They are made of durable and high-quality materials, ensuring long-term durability without wear.