TSP-2416-B

M-Swing B

The M-swing is made from strong and durable stainless steel combined with a wide rope nest seat. By allowing several children to swing together it promotes a shared play experience while ensuring stability and safety. The unique M-shaped design gives the swing an attractive and appealing look, making it a central feature in any playground and providing an enjoyable and safe swinging experience.

Steel:

Rope Cables:





Balancing

Swinging

Ages 5-12

Users 5

Dimensions L: 2'-88" W: 9'-6" H: 4'-86" | cm L: 90 W: 300 H: 152

Safety Zone 20'-3.9"/9'-10.2" | cm 617.22 / 299.72

Fall Height 5'-12" | 160 cm

Accessible

Physical Development

Balancing- Improving balance and posture. Swinging - Strengthening core muscles and enhancing the sense of movement.

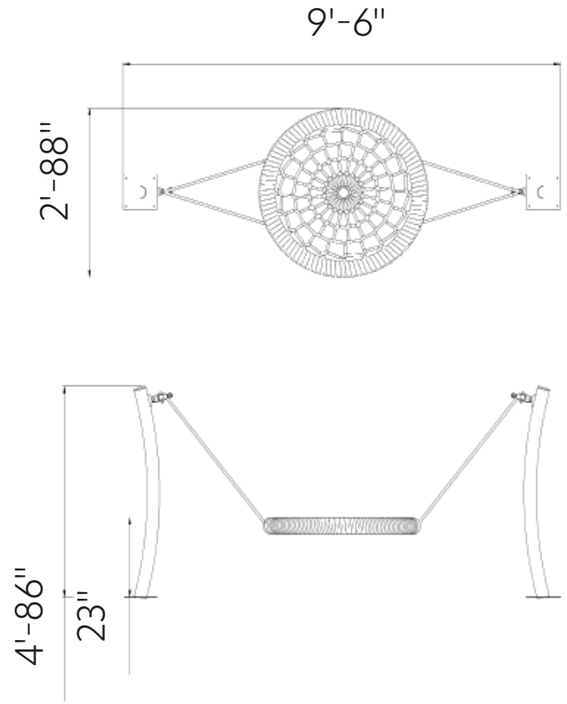

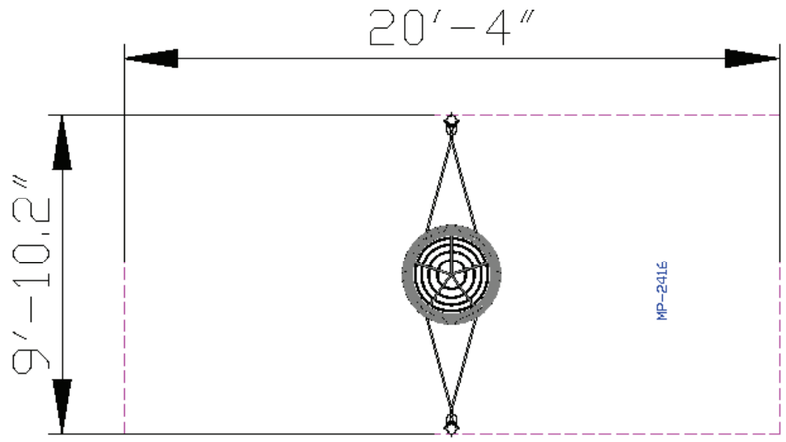



Rope Cables

Rope Cables are made of synthetic polypropylene (PP) fibers combined with a galvanized steel core for improved strength and durability. They meet strict standards such as MATI 1498/1497, ASTM A240, and EN 10088, ensuring durability and safety for use in playground equipment. The cables offer a soft and pleasant touch that does not harm the hands during use and are available in various diameters and colors, allowing for creative and aesthetic design.



Steel

Steel structure that is strong and durable, oven-painted galvanized and coated with lead-free polyester powder for corrosion and rust resistance. The steel meets strict EN 1176 standards, ensuring high quality and safety. The steel is anti-vandalistic, requires minimal maintenance, and is fully recyclable. The high-quality paint ensures weather resistance and maintains a new appearance over time.



Spinning Top

The spinning top offers an exciting and challenging spinning experience that develops players' motor skills and balance. Playing with the spinning top encourages movement, coordination, and self-confidence.

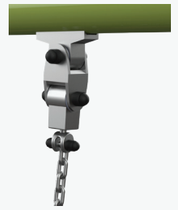

Bearings

Bearings provide smooth and supported internal movement for the element. They ensure smooth and safe movements, enhancing the play experience by reducing friction and effort.