TSP-2427B

Inclusive Peanut Spring B

Inclusive spring seesaw for two model Peanut Spring B

Recycled HDPE:

Steel:

Balancing

Swinging

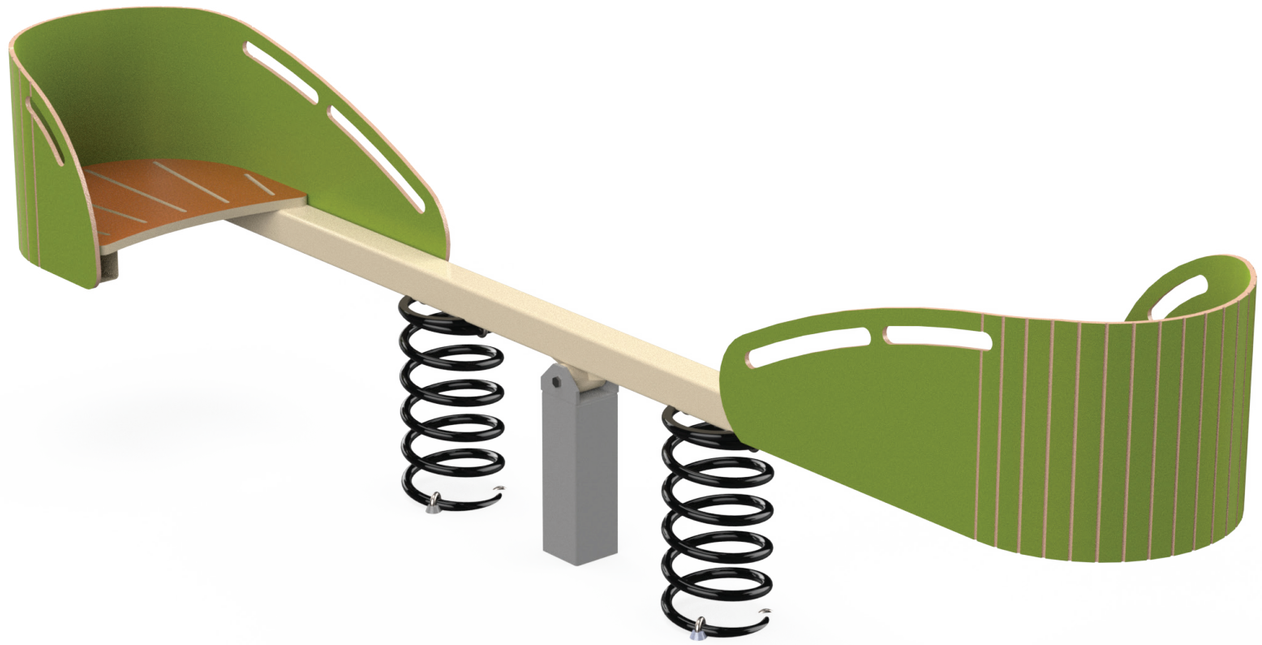

Ages 5-12

Users 2

Dimensions L: 2'-97" W: 8'-86" H:2'-59"" | cm L: 93 W: 277 H: 81

Safety Zone 21'-1.3"/13'-5.6" | cm 642.62 / 408.94

Fall Height 100" | 3'-2" cm

Extra accessibility

Accessible metal and HDPE seesaw for two-person up-and-down and balance play. The seesaw has two supportive seats, making it suitable for people with special needs as well as the general public. Designed for enjoyable play by two users or even a single player, thanks to springs that allow movement from one side only. Develops communication skills, self-confidence, and balance.

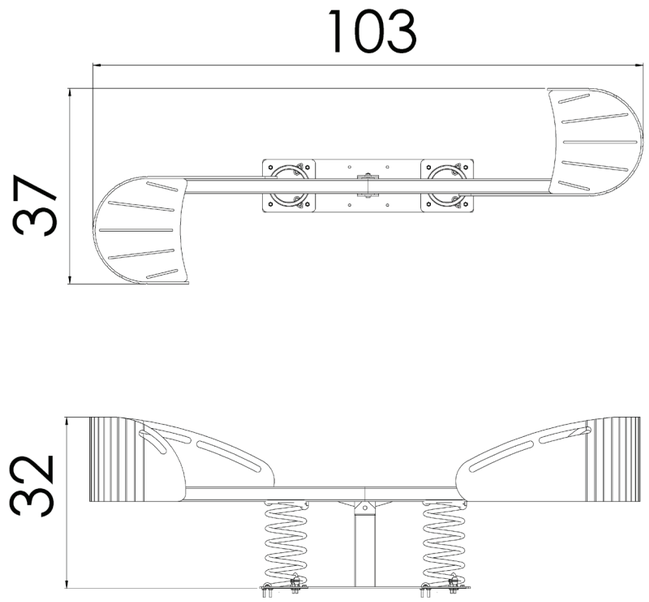

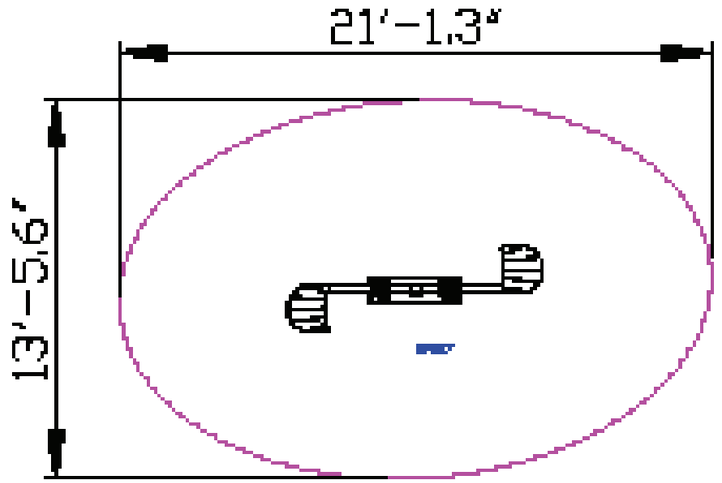





Steel

Steel structure that is strong and durable, oven-painted galvanized and coated with lead-free polyester powder for corrosion and rust resistance. The steel meets strict EN 1176 standards, ensuring high quality and safety. The steel is anti-vandalistic, requires minimal maintenance, and is fully recyclable. The high-quality paint ensures weather resistance and maintains a new appearance over time.



Recycled HDPE

HDPE (High-Density Polyethylene) is a recycled material made from high-density polyethylene, produced from recycled materials that allows for further recycling. It excels in resistance to UV rays and wear and tear, making it particularly suitable for use in outdoor playground equipment. Its touch is smooth and pleasant, and its appearance is maintained over time. The advantages include high resistance to harsh weather conditions and environmental preservation. The material is capable of absorbing high energy, which helps prevent fractures.

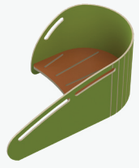

Transfer Accessibility

Suitable for transfer accessibility to ensure convenient and safe access for children with disabilities, including smooth transitions from a wheelchair to the play structure and back.

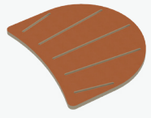

Seat

A seat that provides a small resting station during play where players can sit and rest. Suitable for short breaks or extended stays. Playing on the seat allows players to take a break from physical activity while maintaining connection with the environment and continuing social interactions.



Hand and Foot Holds

Hand and foot holds provide support during play and use of the structure. Players develop their strength and coordination while maintaining stability and security.



Movement Mechanism

The movement mechanism is integrated into the structure to smoothly and safely drive moving components. It is designed to enable controlled and continuous motion, ensuring player safety and extending the lifespan of the equipment.



Springs

The springs are made of high-quality, durable materials, designed safely without pinching or entrapments. They allow for movement and rocking games, developing motor skills, spatial awareness, and a sense of balance.



Motor Development

Hand-eye coordination - Developing coordination and precision in activities requiring fine motor skills.



Cognitive Development

Concentration- Developing the ability to focus and maintain attention in equipment requiring concentration. Regulation of force- Developing the ability to apply the right amount of force according to the activity.



Physical Development

Balancing- Improving balance and posture. Swinging - Strengthening core muscles and enhancing the sense of movement.