TSP-2429

Fishies Spring

HDPE multiplayer spring seesaw model Fishies

Recycled HDPE:

Steel:

Balancing

Swinging

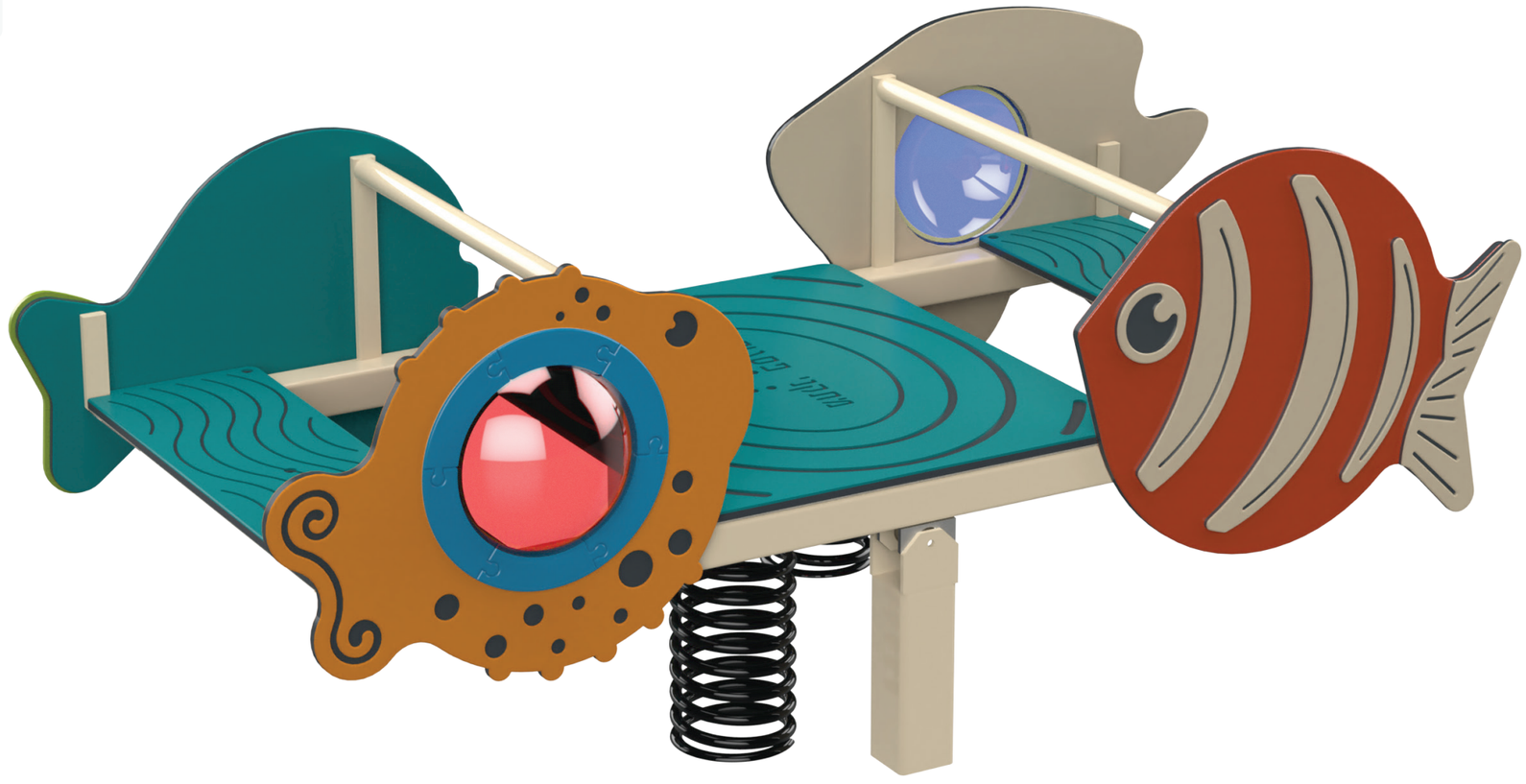

Ages 2-5

Users 8

Dimensions L: 8'-32" W: 3'-68" H: 3'-96" | cm L: 251 W: 115 H: 124

Safety Zone 21'-0.5"/15'-2.6" | cm 640.08 / 462.28

Fall Height 3'-2" | 100 cm

Accessible

An HDPE play structure with fish figures mounted on springs. Perfectly suited for imaginative ocean sailing and role play games, it develops balance and core muscles and strengthens self-confidence.

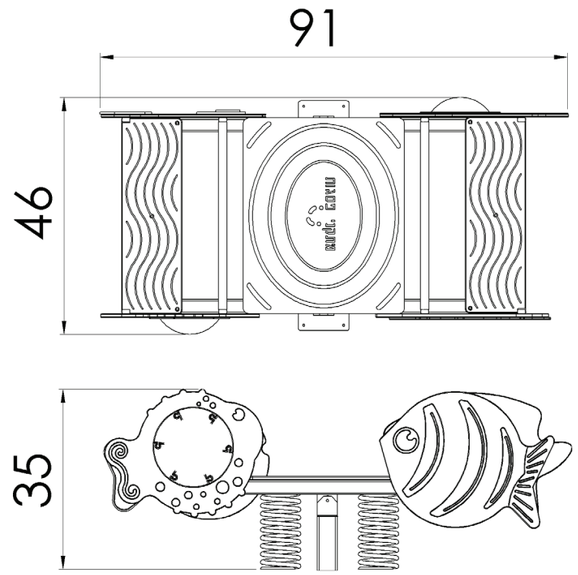

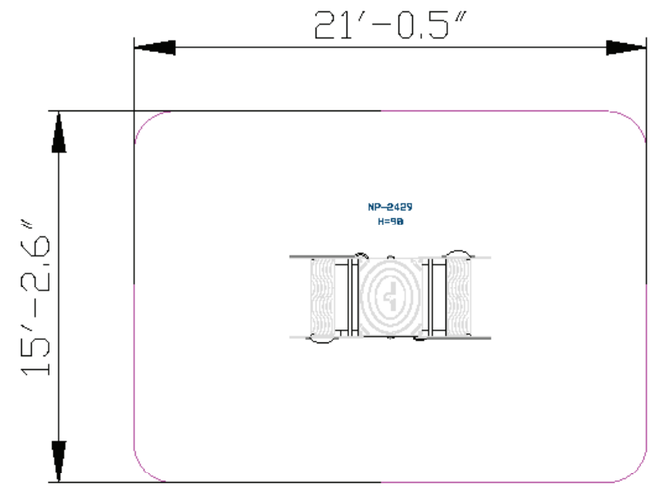





Recycled HDPE

HDPE (High-Density Polyethylene) is a recycled material made from high-density polyethylene, produced from recycled materials that allows for further recycling. It excels in resistance to UV rays and wear and tear, making it particularly suitable for use in outdoor playground equipment. Its touch is smooth and pleasant, and its appearance is maintained over time. The advantages include high resistance to harsh weather conditions and environmental preservation. The material is capable of absorbing high energy, which helps prevent fractures.



Steel

Steel structure that is strong and durable, oven-painted galvanized and coated with lead-free polyester powder for corrosion and rust resistance. The steel meets strict EN 1176 standards, ensuring high quality and safety. The steel is anti-vandalistic, requires minimal maintenance, and is fully recyclable. The high-quality paint ensures weather resistance and maintains a new appearance over time.

Springy Mat

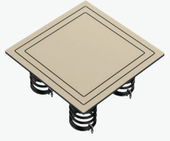

The springy mat encourages players to jump and move. Playing on the springy mat develops players' strength, coordination, and balance.

Clear Bubble



The clear bubble offers a unique vantage point, allowing players to see their surroundings from a different perspective, maintaining eye contact between the companion and the player and ensuring continuous, safe communication. The clear bubble enhances the sense of security for players and companions, especially in cases of young children needing support and supervision during play.

Engravings



Engravings add designs and illustrations to parts of the structure, enriching the play experience with an interesting visual element.

Hand and Foot Holds



Hand and foot holds provide support during play and use of the structure. Players develop their strength and coordination while maintaining stability and security.

Springs



The springs are made of high-quality, durable materials, designed safely without pinching or entrapments. They allow for movement and rocking games, developing motor skills, spatial awareness, and a sense of balance.

Overlays



Unique and designed visual elements that enhance the overall appearance of the structure. The overlays are durable and add an extra layer of creativity and enriching play experience for players.

Designed Panel



The designed panel adds an aesthetic and unique dimension to the playground equipment, enhancing the overall play experience. The panel allows players to feel part of a creative and imaginative world, designed to align with the narrative of the playground. The design ensures easy and safe access to play activities, while maintaining a sense of security and enjoyment.

Seat

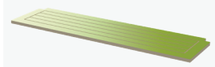

A seat that provides a small resting station during play where players can sit and rest. Suitable for short breaks or extended stays. Playing on the seat allows players to take a break from physical activity while maintaining connection with the environment and continuing social interactions.

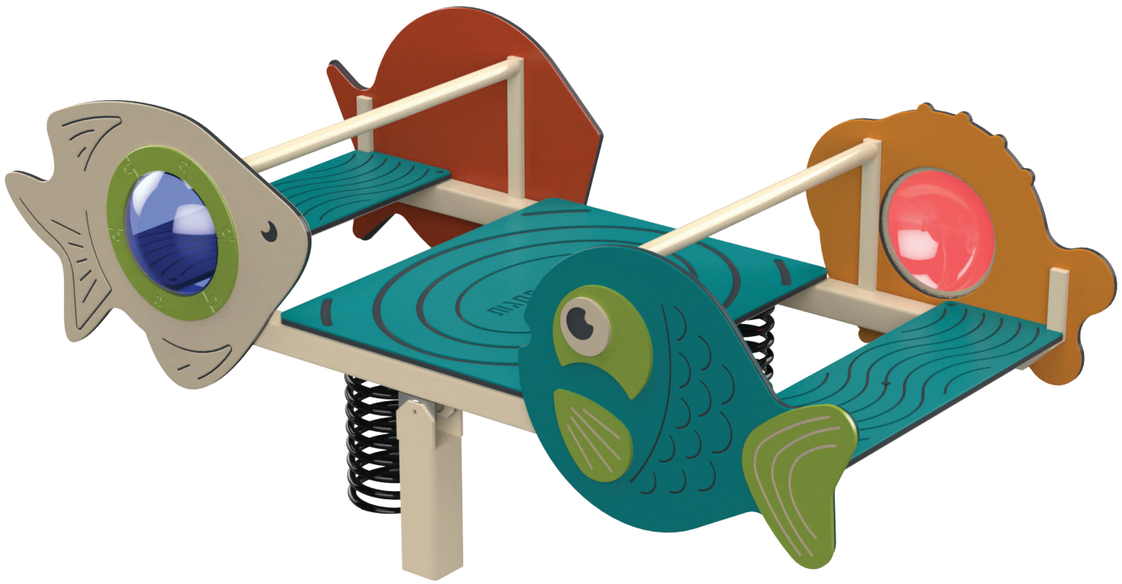

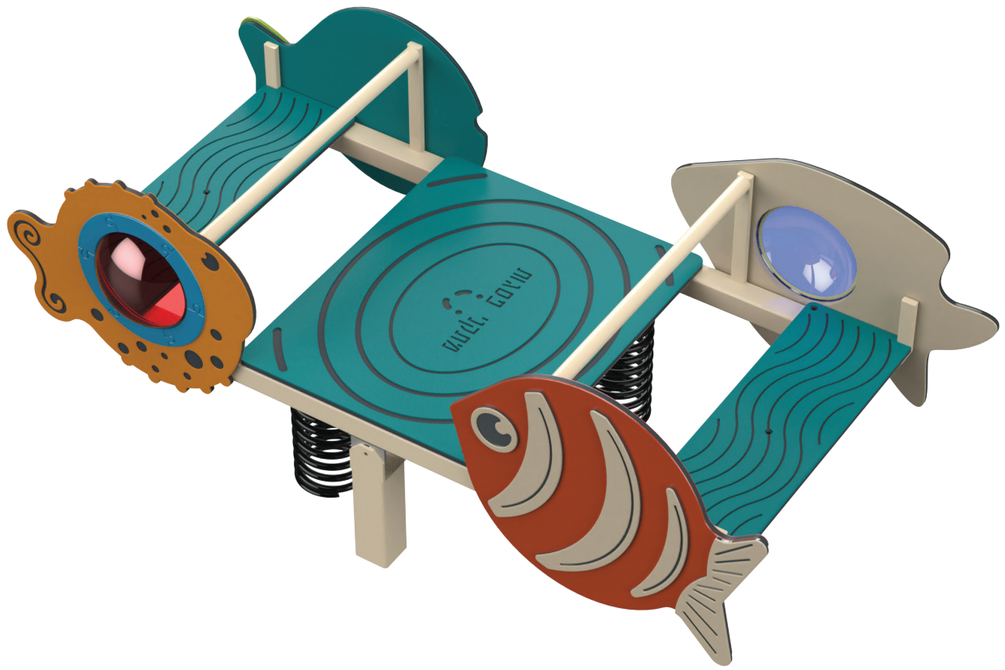

Motor Development

Core muscle strengthening- Strengthening abdominal and back muscles through challenging equipment.

Cognitive Development

Concentration- Developing the ability to focus and maintain attention in equipment requiring concentration. Spatial awareness- Improving the ability to understand and navigate space through mazes and courses.. Curiosity - Encouraging exploration and discovery through equipment providing new and unfamiliar experiences.

Emotional Development

Courage- Facing fears and new challenges. Confidence- Building self-confidence and belief in one's personal abilities. Independence- Developing independence and the ability to make personal decisions. Empathy- Developing the ability to understand and accept differences and complexities. Resilience- Coping with failure and trying again.

Social Development

Cooperation- Encouraging joint work and reaching shared goals. Communication- Developing effective and clear communication skills with playmates Teamwork- Encouraging teamwork and developing group work skills. Empathy- Developing empathy and the ability to understand and empathize with others' feelings.

Physical Development

Balancing- Improving balance and posture. Swinging - Strengthening core muscles and enhancing the sense of movement.