TSP-2430

Mini Rope Snake Swing

A lateral swing designed for simultaneous play by up to 6 users, either seated or standing. The seat is covered with a soft rope that is pleasant to the touch, and each user has access to two handgrip ropes that attach the seat to the frame.

Steel:

Rope Cables:





Balancing

Swinging

Ages 5-12

Users 6

Dimensions L: 6'-65" W: 11'-45" H: 8' | cm L: 208 W: 358 H: 252

Safety Zone 23'-7.5"/19'-11.5" | cm 718 / 607

Fall Height 23" | 60 cm

Accessible

Motor Development

Hand-eye coordination - Developing coordination and precision in activities requiring fine motor skills.

Physical Development

Balancing- Improving balance and posture. Swinging - Strengthening core muscles and enhancing the sense of movement.

Social Development

Cooperation- Encouraging joint work and reaching shared goals. Communication- Developing effective and clear communication skills with playmates. Leadership- Providing opportunities for leadership development and group leading. Teamwork- Encouraging teamwork and developing group work skills.

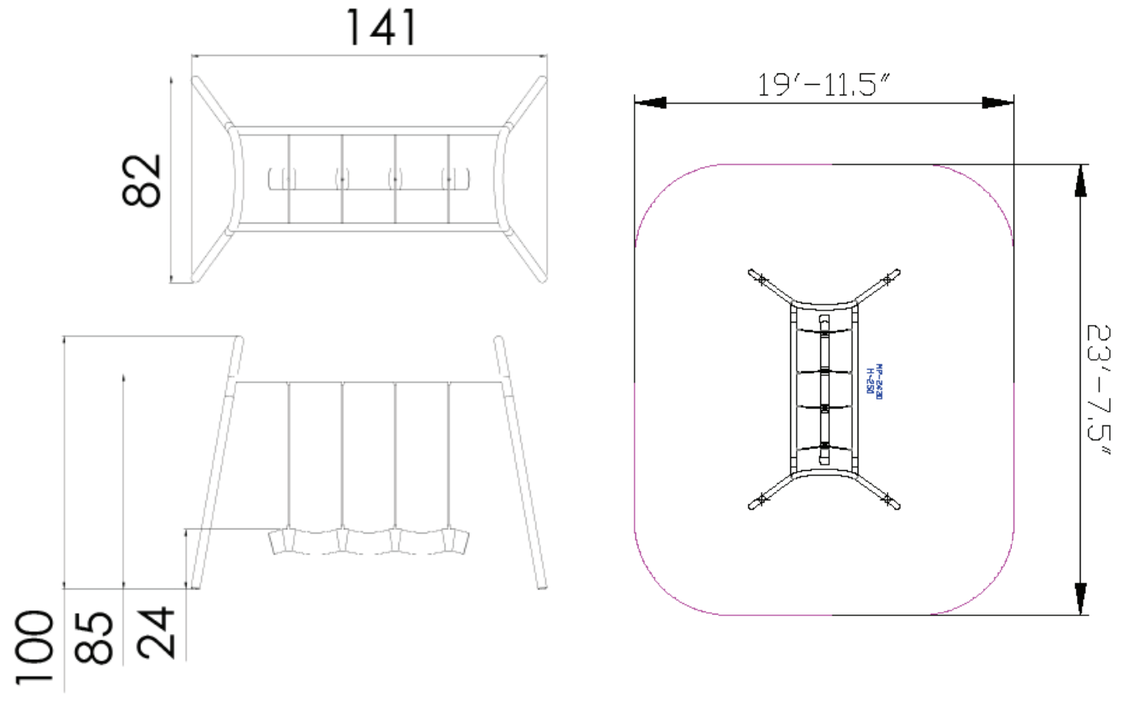



Steel

Steel structure that is strong and durable, oven-painted galvanized and coated with lead-free polyester powder for corrosion and rust resistance. The steel meets strict EN 1176 standards, ensuring high quality and safety. The steel is anti-vandalistic, requires minimal maintenance, and is fully recyclable. The high-quality paint ensures weather resistance and maintains a new appearance over time.



Rope Cables

Rope Cables are made of synthetic polypropylene (PP) fibers combined with a galvanized steel core for improved strength and durability. They meet strict standards, such as ASTM A240 and EN 10088, ensuring durability and safety for use in playground equipment. . The cables offer a soft and pleasant touch that does not harm the hands during use and are available in various diameters and colors, allowing for creative and aesthetic design.



Rope Horse Beam

A high-quality woven rope beam for developing various movement and balance skills.



Hand and Foot Holds

Hand and foot holds provide support during play and use of the structure. Players develop their strength and coordination while maintaining stability and security.