TSP-2447A

Robinia Bird's Nest Swing A

The rope nest swing includes a large, 100 cm diameter seat composed of a steel ring wrapped in high-quality rope and a woven cable net. The playset offers a comfortable spot for lounging or sitting, designed for children of all ages. The swinging experience is one of the most important experiences in on the playground.

Robinia Wood:

Rope Cables:





Ages All age | Users 5 | Dimensions L: 12'-35" W: 3'-9/3" H: 8'-8.1" | cm L: 384 W: 118 H: 271 | Safety Zone 26'-1.1" / 21'-4.5" | cm 795 / 652 | Fall Height 7' | 220 cm | Accessible



Spinning Top

The spinning top offers an exciting and challenging spinning experience that develops players' motor skills and balance. Playing with the spinning top encourages movement, coordination, and self-confidence.



Bearings

Bearings provide smooth and supported internal movement for the element. They ensure smooth and safe movements, enhancing the play experience by reducing friction and effort.



Chains

The chains in our play structures are made from high-quality, durable materials, ensuring safety and long-term use. They are designed to withstand harsh outdoor conditions. The chains are equipped with advanced security mechanisms that prevent disassembly and wear, ensuring a fun and safe play experience for all players.



Emotional Development

Courage- Facing fears and new challenges. Confidence- Building self-confidence and belief in one's personal abilities.



Physical Development

Balancing- Improving balance and posture. Swinging - Strengthening core muscles and enhancing the sense of movement.



Robinia Wood

European Robinia wood is natural, robust, and durable, particularly suitable for use in outdoor playground equipment. It complies with stringent standards such as FSC, has a smooth and pleasant touch, a natural and authentic appearance, and integrates well with natural surroundings. Its high durability, long lifespan, and being a natural and safe material make it a popular choice for use in playground equipment.



Rope Cables

Rope Cables are made of synthetic polypropylene (PP) fibers combined with a galvanized steel core for improved strength and durability. They meet strict standards such as MATI 1498/1497, ASTM A240, and EN 10088, ensuring durability and safety for use in playground equipment. The cables offer a soft and pleasant touch that does not harm the hands during use and are available in various diameters and colors, allowing for creative and aesthetic design.

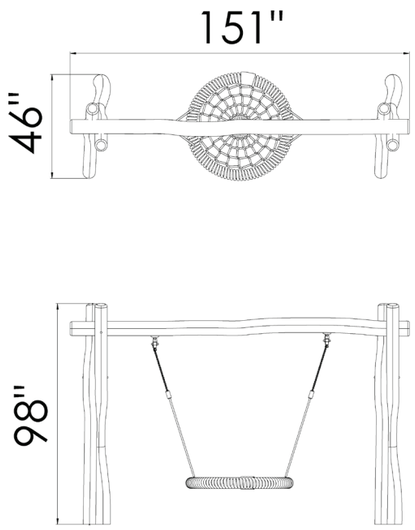

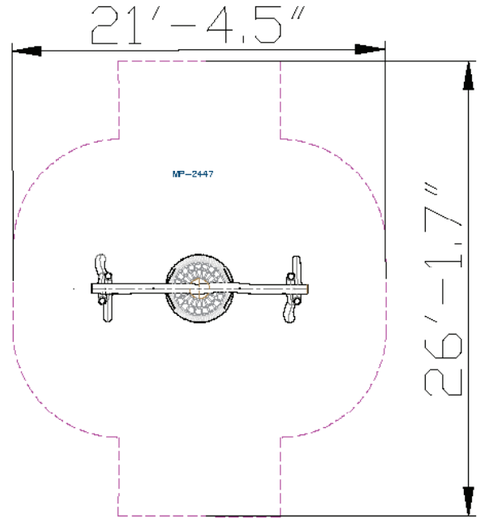

For illustration purposes only ADA

Robinia Bird's Nest Swing A TSP-2447A 2/2 TM