TSP-2447B1

Robinia Swing B1

The swing set is one of the central and most beloved structures in any playground, offering a unique play experience that combines a sense of freedom, exhilaration and social interaction. Swinging provides children with a sense of excitement but can also be calming, all while helping to develop important motor skills such as balance and coordination.

Robinia Wood:





Ages 2-5 | Users 1 | Dimensions L: 8'-8" W: 3'-74" H: 8'-67" | cm L: 117 W: 275 H: 271 | Safety Zone 275" / 172" | cm 700 / 437 | Fall Height 7' | 220 cm | Accessible

Emotional Development

Courage- Facing fears and new challenges. Confidence- Building self-confidence and belief in one's personal abilities.

Physical Development

Balancing- Improving balance and posture. Swinging - Strengthening core muscles and enhancing the sense of movement.

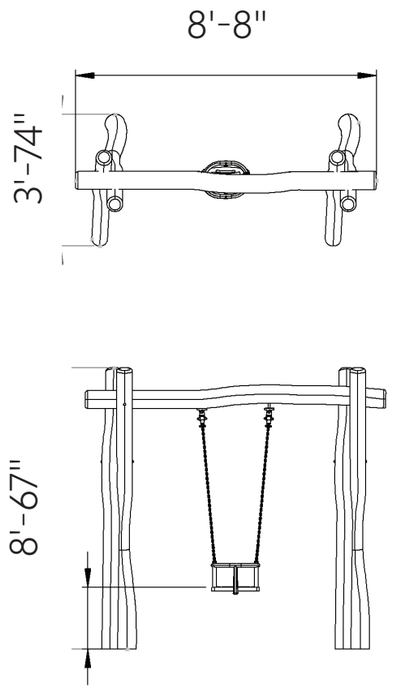

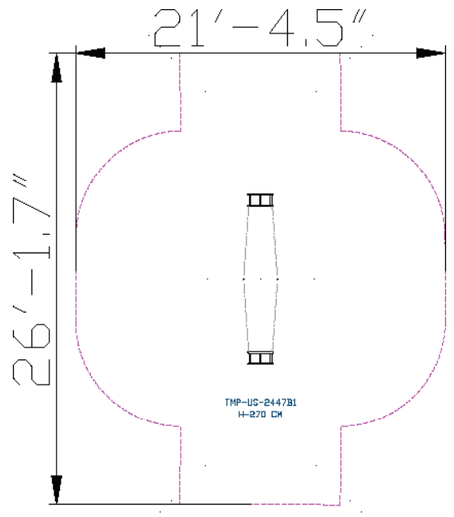



Robinia Wood

European Robinia wood is natural, robust, and durable, particularly suitable for use in outdoor playground equipment. It complies with stringent standards such as FSC, has a smooth and pleasant touch, a natural and authentic appearance, and integrates well with natural surroundings. Its high durability, long lifespan, and being a natural and safe material make it a popular choice for use in playground equipment.



Toddler Swing Seat

The toddler swing seat provides a safe and enjoyable swinging experience for the little ones. It is specially designed to fully support the toddler's body, with built-in safety harnesses to prevent falls. Swinging in the seat helps develop balance and coordination while providing a sense of security for toddlers during play.



Chains

The chains in our play structures are made from high-quality, durable materials, ensuring safety and long-term use. They are designed to withstand harsh outdoor conditions. The chains are equipped with advanced security mechanisms that prevent disassembly and wear, ensuring a fun and safe play experience for all players.



Bearings

Bearings provide smooth and supported internal movement for the element. They ensure smooth and safe movements, enhancing the play experience by reducing friction and effort.