TSP-2447C2

Robinia Swing C2

The swing set is one of the central and most beloved structures in any playground, offering a unique play experience that combines a sense of freedom, exhilaration and social interaction. Swinging provides children with a sense of excitement but can also be calming, all while helping to develop important motor skills such as balance and coordination.

Robinia Wood:





Ages 5-12

Users 2

Dimensions L: 12'-16" W: 3'-74" H: 8'-67" | cm L: 117 W: 380 H: 271

Safety Zone 270" / 226" | cm 687 / 575

Fall Height 7' | 220 cm

Accessible

Emotional Development

Courage- Facing fears and new challenges. Confidence- Building self-confidence and belief in one's personal abilities.

Physical Development

Balancing- Improving balance and posture. Swinging - Strengthening core muscles and enhancing the sense of movement.

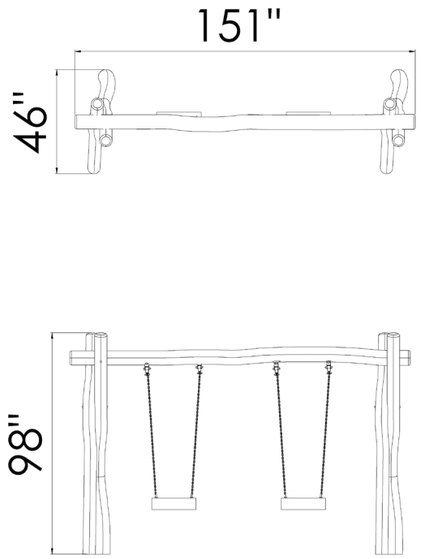

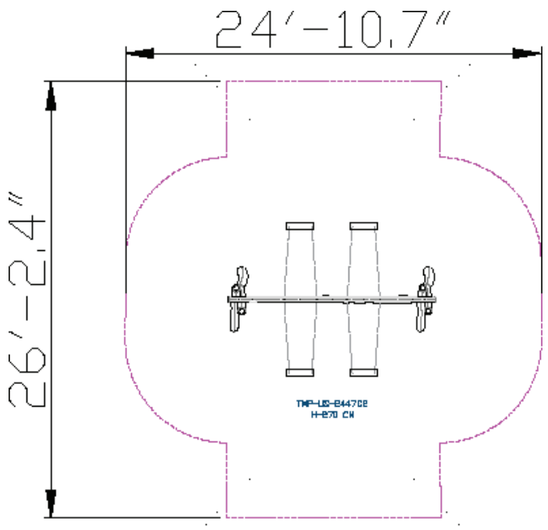



Robinia Wood

European Robinia wood is natural, robust, and durable, particularly suitable for use in outdoor playground equipment. It complies with stringent standards such as FSC, has a smooth and pleasant touch, a natural and authentic appearance, and integrates well with natural surroundings. Its high durability, long lifespan, and being a natural and safe material make it a popular choice for use in playground equipment.



Swing Seat

The swing seat provides players with an enjoyable swinging experience. Swinging on the seat helps develop players' balance, coordination, and strength while enjoying outdoor activities. The seat is designed to offer maximum support and safety during the swinging motion.



Chains

The chains in our play structures are made from high-quality, durable materials, ensuring safety and long-term use. They are designed to withstand harsh outdoor conditions. The chains are equipped with advanced security mechanisms that prevent disassembly and wear, ensuring a fun and safe play experience for all players.



Bearings

Bearings provide smooth and supported internal movement for the element. They ensure smooth and safe movements, enhancing the play experience by reducing friction and effort.