TSP-2447D

Robinia Inclusive Swing D

An accessible rope swing offers children a safe and comfortable opportunity to enjoy swinging. Made from natural Robinia Wood, the swing features a rope seat with full accessibility. Swinging is one of the most enjoyable and important experiences in a playground, as it helps develop balance, strengthens core muscles, and provides a sense of freedom and calm. The equipment is suitable for children of all ages and physical abilities and allows for a shared and inclusive play experience.

Robinia Wood:

Rope Cables:





Ages 5-12

Users 1

Dimensions L: 12'-16" W: 3'-74" H: 8'-67" | cm L: 268 W: 114 H: 271

Safety Zone 26'-1.7" / 21'-4.5" | cm 789 / 629

Fall Height 3'-2" | 100 cm

Extra accessibility



Spinning Top

The spinning top offers an exciting and challenging spinning experience that develops players' motor skills and balance. Playing with the spinning top encourages movement, coordination, and self-confidence.



Bearings

Bearings provide smooth and supported internal movement for the element. They ensure smooth and safe movements, enhancing the play experience by reducing friction and effort.



Chains

The chains in our play structures are made from high-quality, durable materials, ensuring safety and long-term use. They are designed to withstand harsh outdoor conditions. The chains are equipped with advanced security mechanisms that prevent disassembly and wear, ensuring a fun and safe play experience for all players.



Robinia Wood

European Robinia wood is natural, robust, and durable, particularly suitable for use in outdoor playground equipment. It complies with stringent standards such as FSC, has a smooth and pleasant touch, a natural and authentic appearance, and integrates well with natural surroundings. Its high durability, long lifespan, and being a natural and safe material make it a popular choice for use in playground equipment.



Rope Cables

Rope Cables are made of synthetic polypropylene (PP) fibers combined with a galvanized steel core for improved strength and durability. They meet strict standards such as MATI 1498/1497, ASTM A240, and EN 10088, ensuring durability and safety for use in playground equipment. The cables offer a soft and pleasant touch that does not harm the hands during use and are available in various diameters and colors, allowing for creative and aesthetic design.

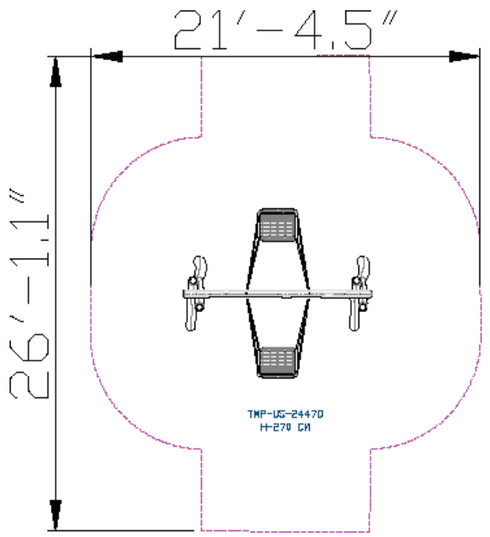

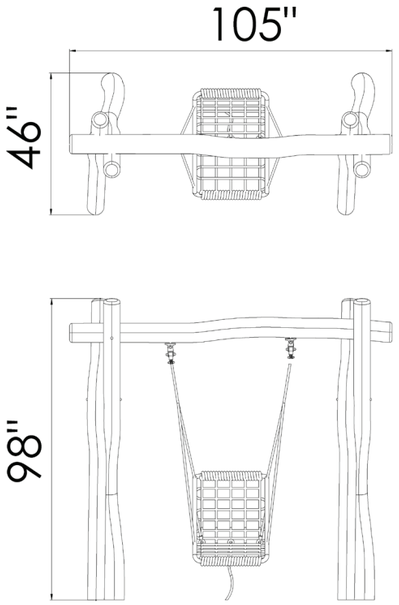

Emotional Development

Imagination- Encouraging imagination and creating play worlds. Courage- Facing fears and new challenges. Confidence- Building self-confidence and belief in one's personal abilities.

Social Development

Empathy- Developing empathy and the ability to understand and empathize with others' feelings.

Physical Development

Balancing- Improving balance and posture. Swinging - Strengthening core muscles and enhancing the sense of movement.