TSP-2447F

Robinia Parent-Child Swing

Designed to enable parents and children to enjoy a shared swinging experience, this Robinia wood parent-child swing allows them to swing together facing each other. The swing set is made of natural European Robinia wood, combined with HDPE seats and a galvanized and painted steel structure, ensuring high durability and safety. The swing is designed to allow the parent and child to maintain direct eye contact during the swinging motion, strengthening their emotional bond. The shared swinging experience contributes to the child's balance and coordination development, providing special moments of closeness and joy for both parent and child.

Robinia Wood:





Ages 5-12 | Users 2 | Dimensions L: 11'-68" W: 3'-74" H: 8'-67" | cm L: 117 W: 365 H: 271 | Safety Zone 275" / 172" | cm 700 / 437 | Fall Height 3'-2" | 100 cm | Accessible

Emotional Development

Courage- Facing fears and new challenges. Confidence- Building self-confidence and belief in one's personal abilities.

Physical Development

Balancing- Improving balance and posture. Swinging - Strengthening core muscles and enhancing the sense of movement.

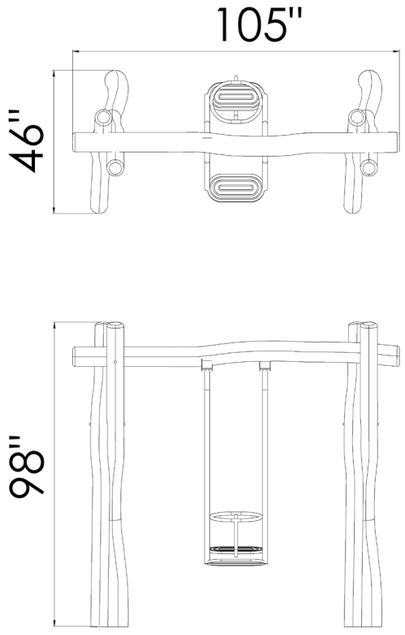

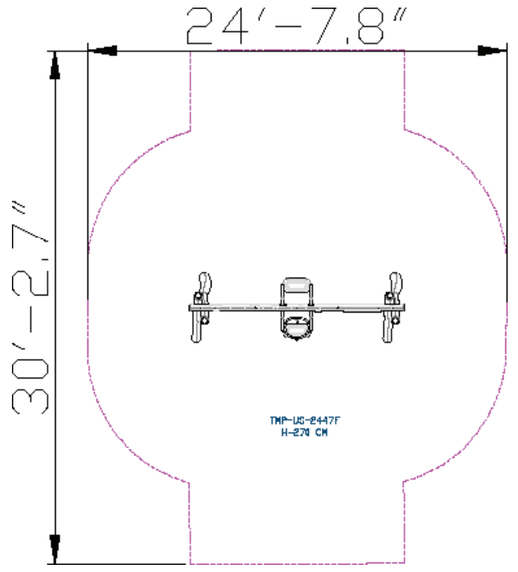



Robinia Wood

European Robinia wood is natural, robust, and durable, particularly suitable for use in outdoor playground equipment. It complies with stringent standards such as FSC, has a smooth and pleasant touch, a natural and authentic appearance, and integrates well with natural surroundings. Its high durability, long lifespan, and being a natural and safe material make it a popular choice for use in playground equipment.



Parent and Child

This swing seat allows a parent and child to sit facing each other and swing together, strengthening the bond between them through shared playtime. The swing encourages interaction, cooperation, and mutual enjoyment during the swinging experience.



Rosta Bearing

A special bearing that allows for smooth movement and fun in the structure.