TSP-2452C

Square Frame Double Swing C

Square frame double logs swing C

Steel:

Balancing

Swinging

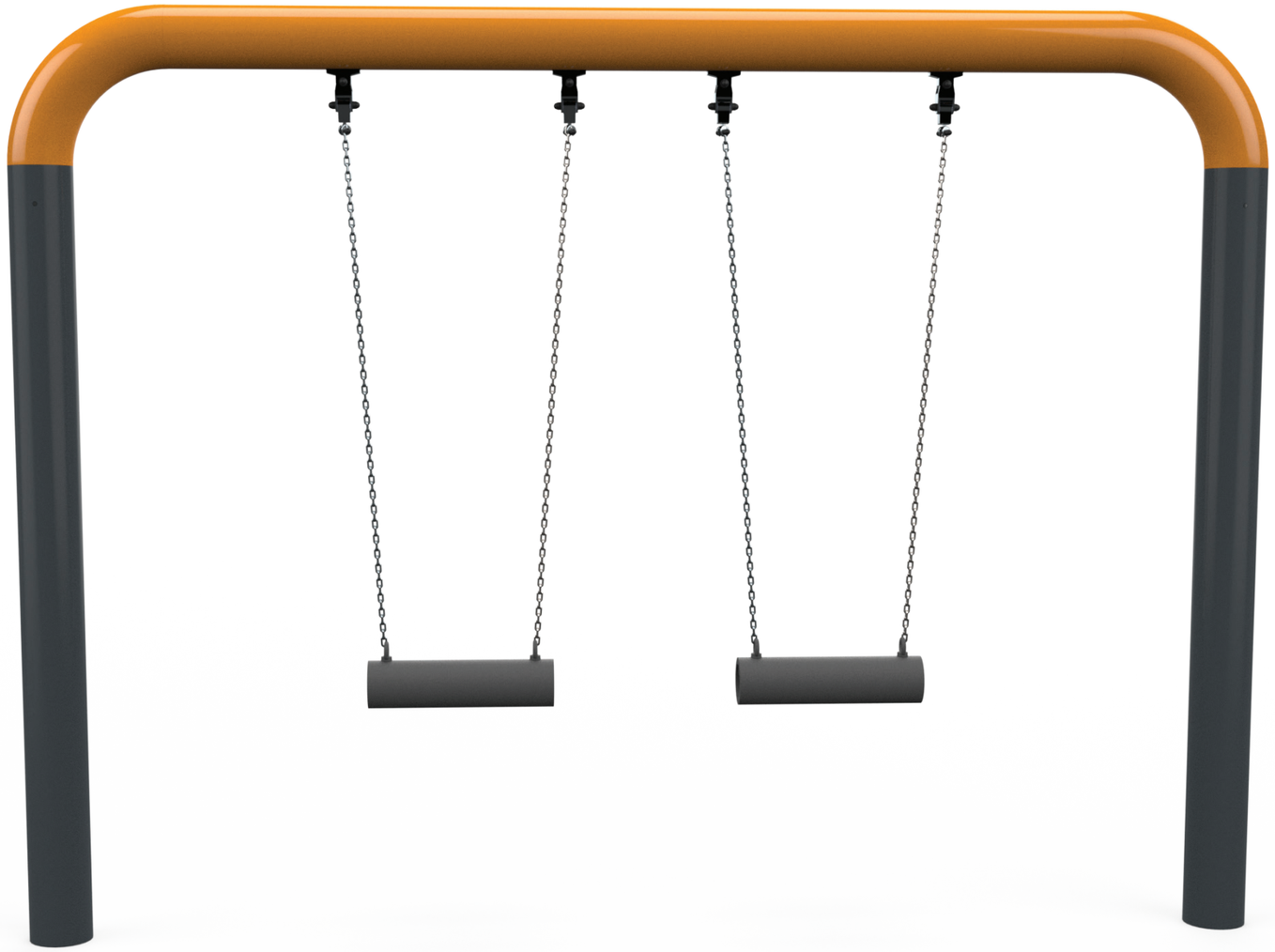

Ages 5-12

Users 2

Dimensions L: 51" W: 10'-46" H: 7'-2" | cm L: 16 W: 327 H: 225

Safety Zone 16'-11.1"/11'-2.6" | cm 515/ 340

Fall Height 7'-0.5" | 220 cm

Accessible

Swing set featuring a metal frame with two log seats, suitable for all ages and levels of play.

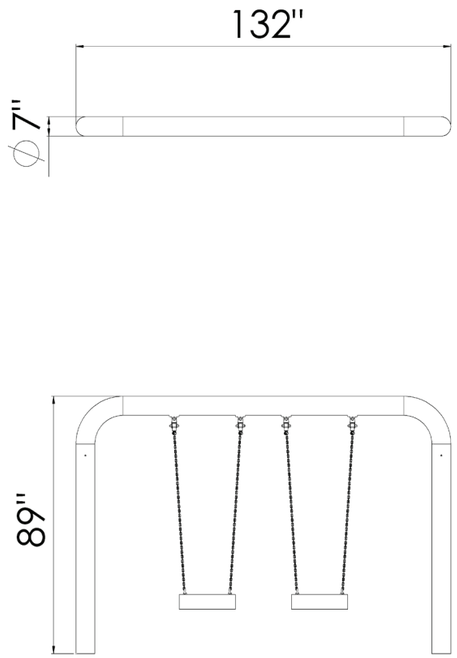

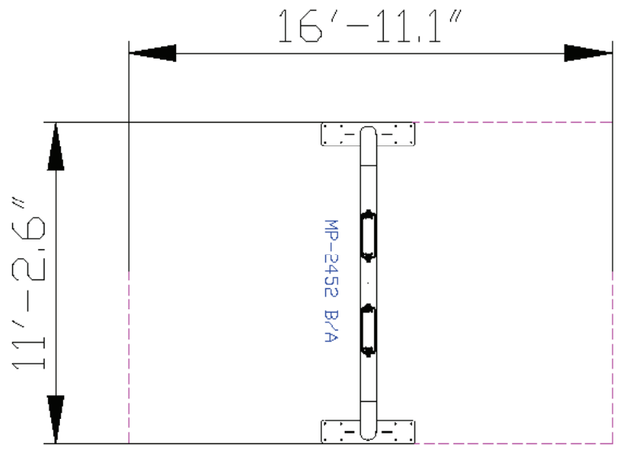





Steel

Steel structure that is strong and durable, oven-painted galvanized and coated with lead-free polyester powder for corrosion and rust resistance. The steel meets strict EN 1176 standards, ensuring high quality and safety. The steel is anti-vandalistic, requires minimal maintenance, and is fully recyclable. The high-quality paint ensures weather resistance and maintains a new appearance over time.



Swing Seat

The swing seat provides players with an enjoyable swinging experience. Swinging on the seat helps develop players' balance, coordination, and strength while enjoying outdoor activities. The seat is designed to offer maximum support and safety during the swinging motion.

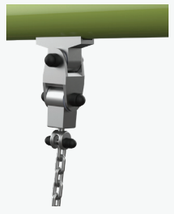

Bearings

Bearings provide smooth and supported internal movement for the element. They ensure smooth and safe movements, enhancing the play experience by reducing friction and effort.



Chains

The chains in our play structures are made from high-quality, durable materials, ensuring safety and long-term use. They are designed to withstand harsh outdoor conditions. The chains are equipped with advanced security mechanisms that prevent disassembly and wear, ensuring a fun and safe play experience for all players.



Cognitive Development

Regulation of force- Developing the ability to apply the right amount of force according to the activity.



Physical Development

Balancing- Improving balance and posture. Swinging - Strengthening core muscles and enhancing the sense of movement.



Social Development

Cooperation- Encouraging joint work and reaching shared goals. Communication- Developing effective and clear communication skills with playmates. Friendship creation- Creating friendships and strengthening social bonds.



Motor Development

Hand-eye coordination - Developing coordination and precision in activities requiring fine motor skills. Foot-eye coordination - Improving coordination and balance through various equipment.



Emotional Development

Courage- Facing fears and new challenges. Confidence- Building self-confidence and belief in one's personal abilities. Independence- Developing independence and the ability to make personal decisions. Resilience- Coping with failure and trying again.