TSP-2498b

Double Walnut B

Seesaw for four model Double Walnut B

Recycled HDPE:

Steel:

Balancing

Swinging

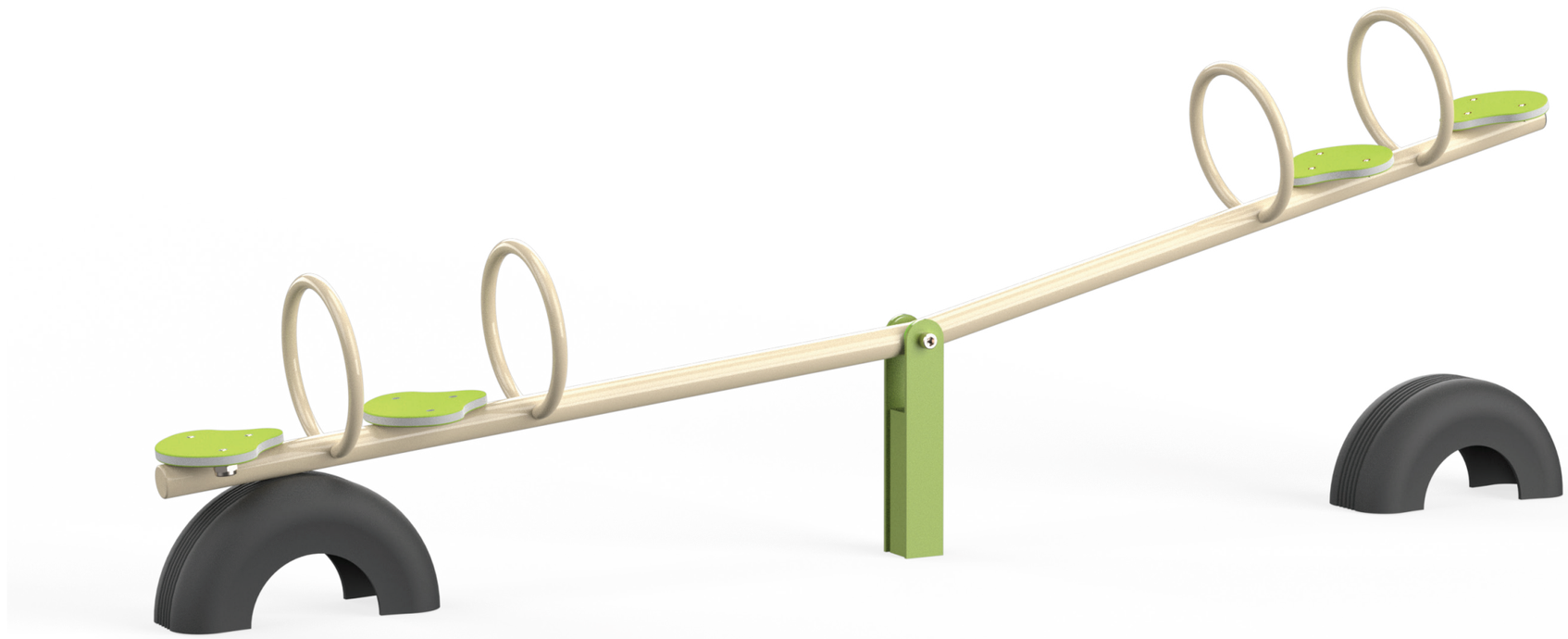

Ages 5-12

Users 4

Dimensions L: 1' W: 9'-6" H: 2'-49" | cm L: 32 W: 300 H: 78

Safety Zone 13'-1.4"/21'-10.2" | cm 398.78 / 665.48

Fall Height 3'-2" | 100 cm

Accessible

A four-person seesaw made of metal with HDPE seats. A classic seesaw with a clean design, intended for enjoyable play by two to four children. Develops communication skills, self-confidence, and balance.

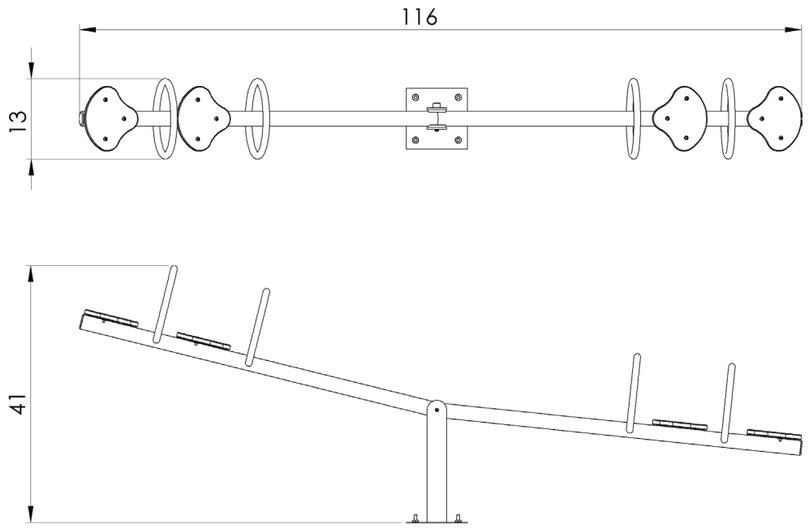

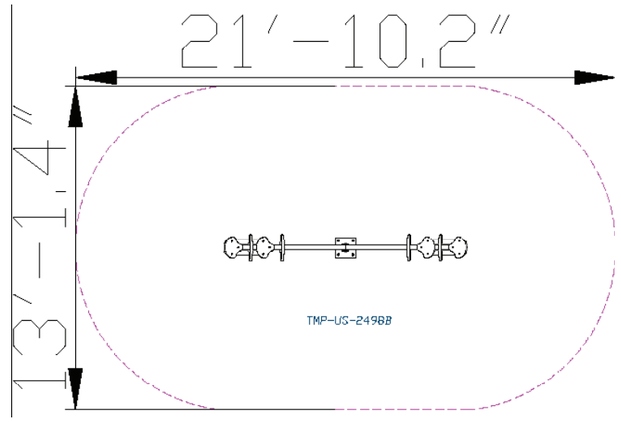





Steel

Steel structure that is strong and durable, oven-painted galvanized and coated with lead-free polyester powder for corrosion and rust resistance. The steel meets strict EN 1176 standards, ensuring high quality and safety. The steel is anti-vandalistic, requires minimal maintenance, and is fully recyclable. The high-quality paint ensures weather resistance and maintains a new appearance over time.



Recycled HDPE

HDPE (High-Density Polyethylene) is a recycled material made from high-density polyethylene, produced from recycled materials that allows for further recycling. It excels in resistance to UV rays and wear and tear, making it particularly suitable for use in outdoor playground equipment. Its touch is smooth and pleasant, and its appearance is maintained over time. The advantages include high resistance to harsh weather conditions and environmental preservation. The material is capable of absorbing high energy, which helps prevent fractures.



Movement Mechanism

The movement mechanism is integrated into the structure to smoothly and safely drive moving components. It is designed to enable controlled and continuous motion, ensuring player safety and extending the lifespan of the equipment.



Seat

A seat that provides a small resting station during play where players can sit and rest. Suitable for short breaks or extended stays. Playing on the seat allows players to take a break from physical activity while maintaining connection with the environment and continuing social interactions.



Hand and Foot Holds

Hand and foot holds provide support during play and use of the structure. Players develop their strength and coordination while maintaining stability and security.



Motor Development

Hand-eye coordination - Developing coordination and precision in activities requiring fine motor skills.



Cognitive Development

Concentration- Developing the ability to focus and maintain attention in equipment requiring concentration. Regulation of force- Developing the ability to apply the right amount of force according to the activity.



Physical Development

Balancing- Improving balance and posture. Swinging - Strengthening core muscles and enhancing the sense of movement.



Social Development

Cooperation- Encouraging joint work and reaching shared goals. Communication- Developing effective and clear communication skills with playmates. Friendship creation- Creating friendships and strengthening social bonds.



Emotional Development

Courage- Facing fears and new challenges. Confidence- Building self-confidence and belief in one's personal abilities. Independence- Developing independence and the ability to make personal decisions. Resilience- Coping with failure and trying again.