TSP-2588

Spaceship Spring

HPL spring model Spaceship

HPL:

Steel:

Balancing

Swinging

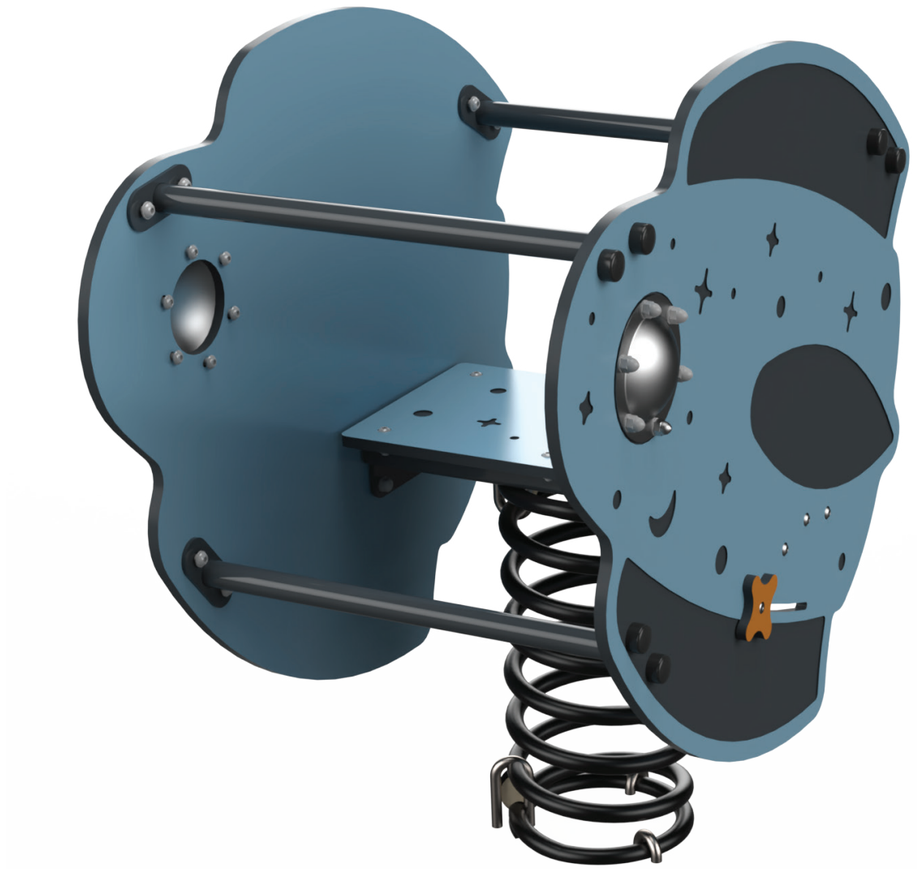

Ages 2-5

Users 1

Dimensions L: 1'-8" W: 2'-6.3" H: 2'-9.4" | cm L: 52 W: 79 H: 87

Safety Zone 14'-3.7"/13'-7.1" | cm 434.34 / 414.02

Fall Height 3'-2" | 100 cm

Accessible

Spaceship Spring is a play structure with a single seat. The rocket is made of galvanized metal, rolled and painted, with designed HPL panels. The spring promotes a rocking experience that is loved by young children due to its rhythmic and reciprocating motion, and many children incorporate imaginative role play while rocking and teetering.

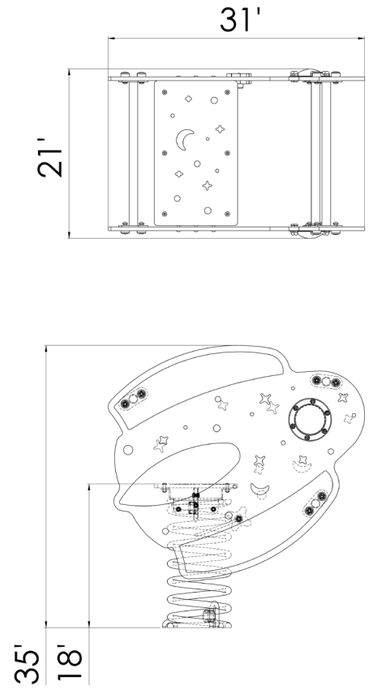

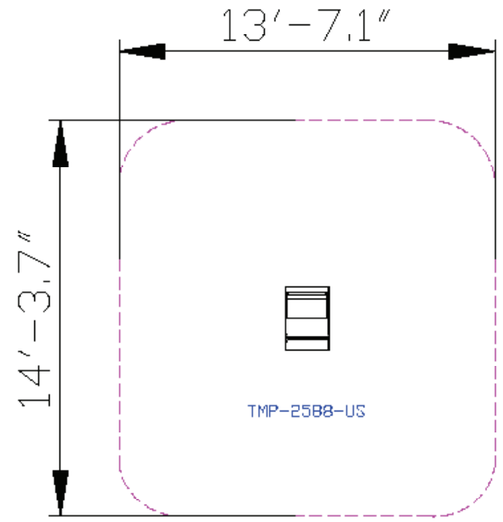





HPL

HPL panels are high-pressure laminate boards produced by saturating multiple layers of kraft paper with phenolic resin. These panels offer high resistance to abrasion, scratches, and chemical impacts, maintaining their quality in both outdoor and indoor conditions. Available in a variety of colors and textures, HPL panels are used for surfaces, walls, and furniture in playground equipment, providing an aesthetic appearance and requiring low maintenance.



Steel

Steel structure that is strong and durable, oven-painted galvanized and coated with lead-free polyester powder for corrosion and rust resistance. The steel meets strict EN 1176 standards, ensuring high quality and safety. The steel is anti-vandalistic, requires minimal maintenance, and is fully recyclable. The high-quality paint ensures weather resistance and maintains a new appearance over time.

Springy Mat

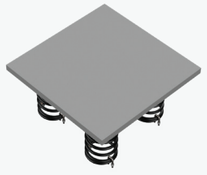

The springy mat encourages players to jump and move. Playing on the springy mat develops players' strength, coordination, and balance.

Engravings



Engravings add designs and illustrations to parts of the structure, enriching the play experience with an interesting visual element.

Moving Game



The moving game provides dynamic activity that develops players' coordination, strength, and motor skills.

Hand and Foot Holds



Hand and foot holds provide support during play and use of the structure. Players develop their strength and coordination while maintaining stability and security.

Overlays



Unique and designed visual elements that enhance the overall appearance of the structure. The overlays are durable and add an extra layer of creativity and enriching play experience for players.

Springs



The springs are made of high-quality, durable materials, designed safely without pinching or entrapments. They allow for movement and rocking games, developing motor skills, spatial awareness, and a sense of balance.

Motor Development

Hand-eye coordination - Developing coordination and precision in activities requiring fine motor skills.

Physical Development

Balancing- Improving balance and posture. Swinging - Strengthening core muscles and enhancing the sense of movement.

Cognitive Development

Concentration- Developing the ability to focus and maintain attention in equipment requiring concentration. Regulation of force- Developing the ability to apply the right amount of force according to the activity.

Social Development

Cooperation- Encouraging joint work and reaching shared goals. Communication- Developing effective and clear communication skills with playmates. Friendship creation- Creating friendships and strengthening social bonds.