TSP-4665

Carob Multi-Spinner

Spinner model Slingshot Multi-Spinner

Recycled HDPE:

Steel:

Balancing Rotation Climbing Jumping Swinging

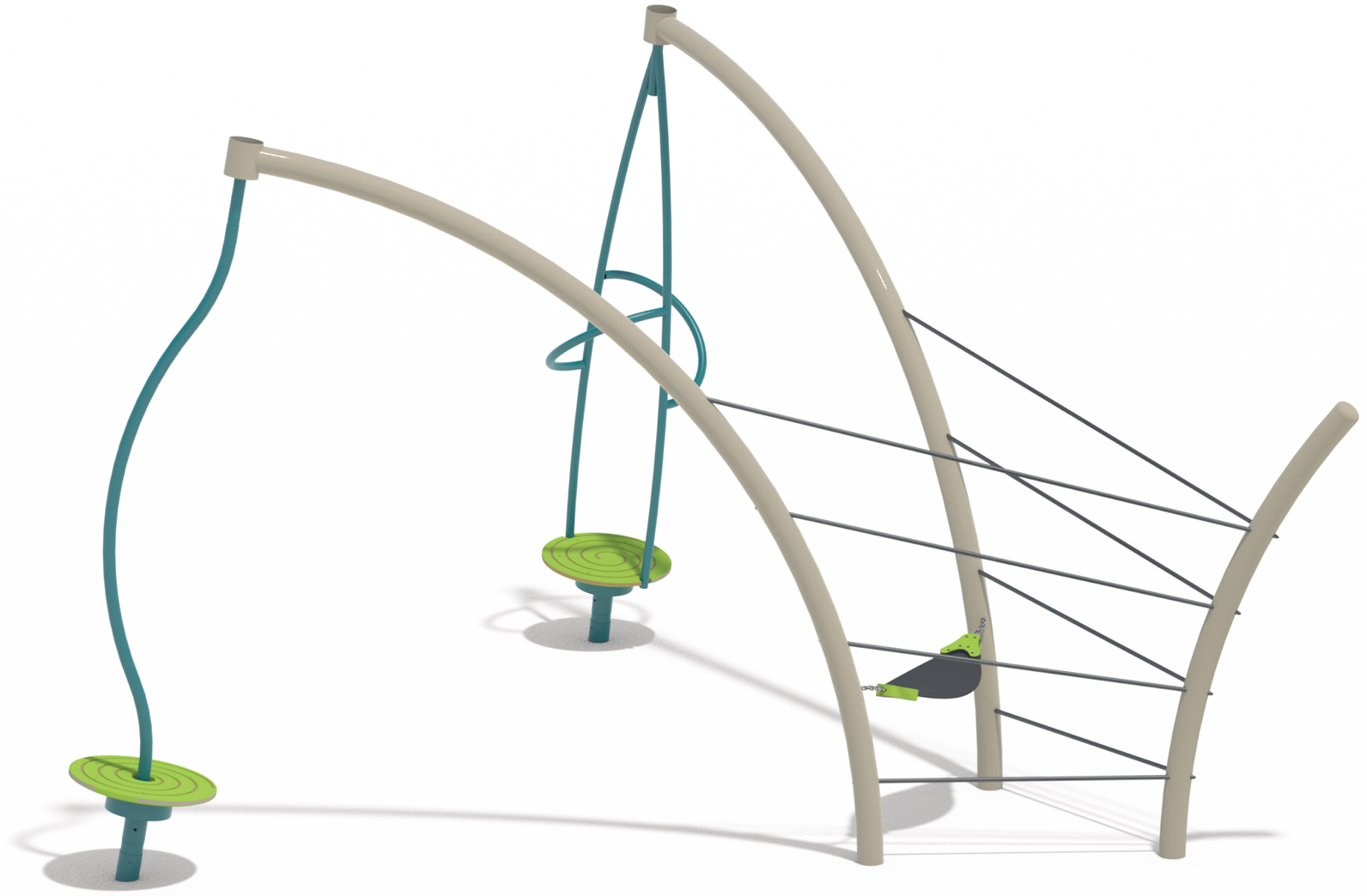

Ages 5-12 | Users 10 | Dimensions L: 12'-32" W: 12'-41" H: 7'-93" | cm L: 376 W: 388 H: 248 | Safety Zone 28'-3.2"/28'-3.2" | cm 861.06 / 861.06 | Fall Height 4'-8" | 150 cm | Accessible

A modern playset with minimalist design featuring two separate spinners with a rope course between them, and a springy stepping surface in the center. Playing on the Carob model develops the vestibular system and the ability to plan a route, as well as arm, leg, and pelvic muscles.

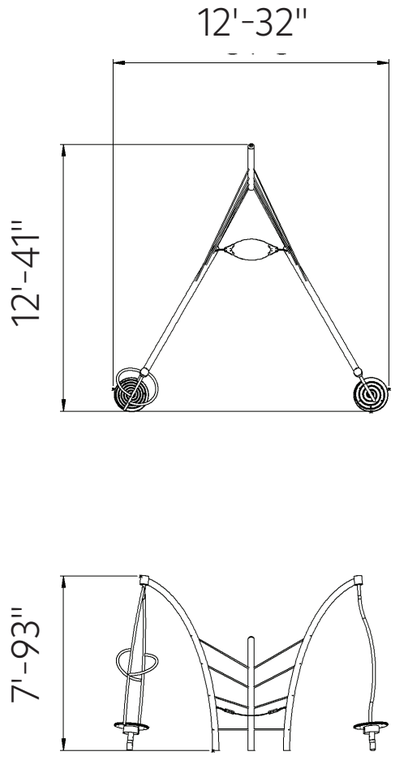

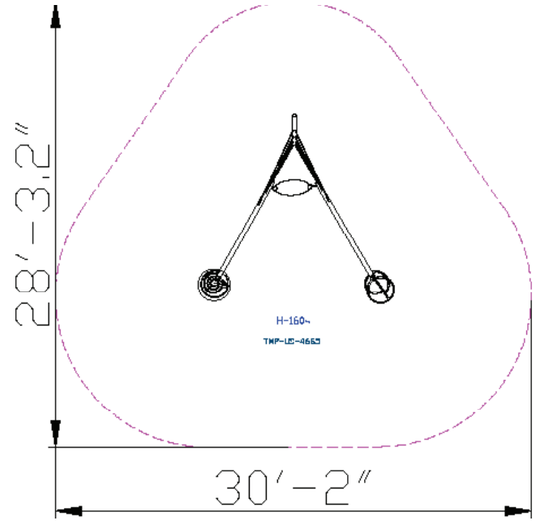





Recycled HDPE

HDPE (High-Density Polyethylene) is a recycled material made from high-density polyethylene, produced from recycled materials that allows for further recycling. It excels in resistance to UV rays and wear and tear, making it particularly suitable for use in outdoor playground equipment. Its touch is smooth and pleasant, and its appearance is maintained over time. The advantages include high resistance to harsh weather conditions and environmental preservation. The material is capable of absorbing high energy, which helps prevent fractures.



Steel

Steel structure that is strong and durable, oven-painted galvanized and coated with lead-free polyester powder for corrosion and rust resistance. The steel meets strict EN 1176 standards, ensuring high quality and safety. The steel is anti-vandalistic, requires minimal maintenance, and is fully recyclable. The high-quality paint ensures weather resistance and maintains a new appearance over time.

Springy Mat



The springy mat encourages players to jump and move. Playing on the springy mat develops

Moving Platform



The moving platform provides a dynamic movement experience that develops players' motor skills and coordination. Playing on the moving platform encourages stability and self-confidence while moving.

Tread Surface

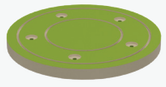

The tread surface provides support and safety during play on the structure. The surface is designed to prevent slipping and improve players' stability and security.

Rope Ladder



The rope ladder provides vertical access to the play structure and encourages players to develop physical skills such as strength, coordination, and balance. Climbing the rope ladder strengthens hand and leg muscles and develops a sense of balance. The ladder encourages players to face challenges and develop flexibility and agility.

Hand and Foot Holds



Hand and foot holds provide support during play and use of the structure. Players develop their strength and coordination while maintaining stability and security.

Motor Development

Foot-eye coordination - Improving coordination and balance through various equipment. Hand-eye coordination - Developing coordination and precision in activities requiring fine motor skills.

Cognitive Development

Concentration- Developing the ability to focus and maintain attention in equipment requiring concentration. Spatial awareness- Improving the ability to understand and navigate space through mazes and courses..

Emotional Development

Courage- Facing fears and new challenges. Confidence- Building self-confidence and belief in one's personal abilities. Independence- Developing independence and the ability to make personal decisions.

Physical Development

Climbing - Strengthening arm and leg muscles, developing fitness and endurance Balancing- Improving balance and posture. Spinning - Improving balance and vestibular functions through carousels.

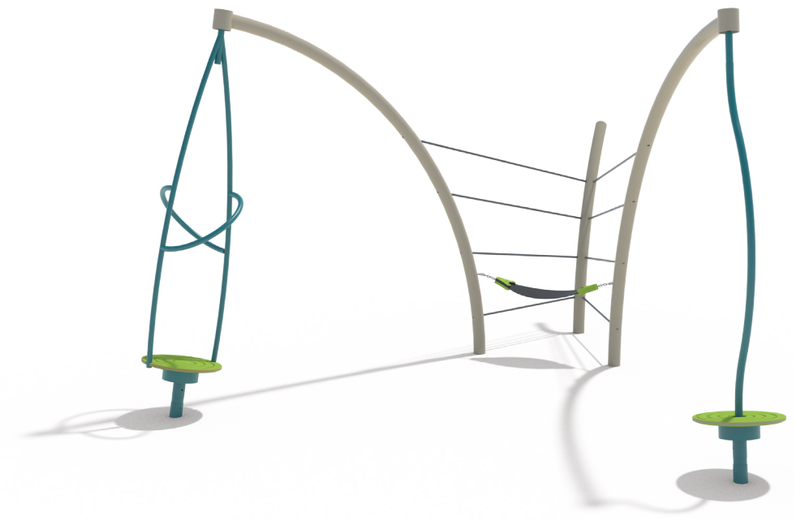

For illustration purposes only ADA

Carob Multi-Spinner TSP-4665 4/4 TM