TSP-5122B

Robina Seesaw B

This classic seesaw is designed with a simple, clean style and made from natural Robinia Wood. The structure allows children to play together on a central beam that teeters back and forth, fostering communication, cooperation, and balance. The seesaw invites children to enjoy the simple and fun experience of see-sawing, which also develops social bonds and self-confidence.

Robinia Wood:





Balancing

Swinging

Ages 5-12

Users 2

Dimensions L: 76" W: 7'-68" H: 2'-17" | cm L: 24 W: 240 H: 68

Safety Zone 182"/84" | cm 463 / 215

Fall Height 3'-2" | 100 cm

Accessible

Motor Development

Hand-eye coordination - Developing coordination and precision in activities requiring fine motor skills.

Physical Development

Balancing- Improving balance and posture. Swinging - Strengthening core muscles and enhancing the sense of movement.

Cognitive Development

Concentration- Developing the ability to focus and maintain attention in equipment requiring concentration. Regulation of force- Developing the ability to apply the right amount of force according to the activity.

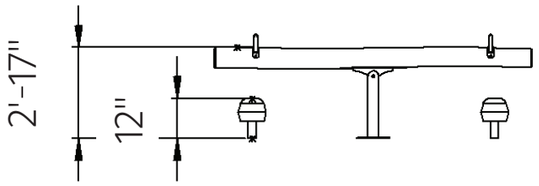

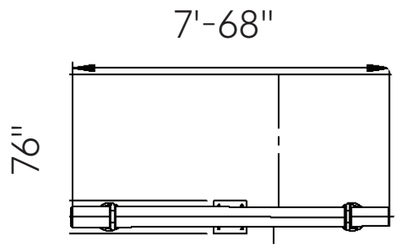

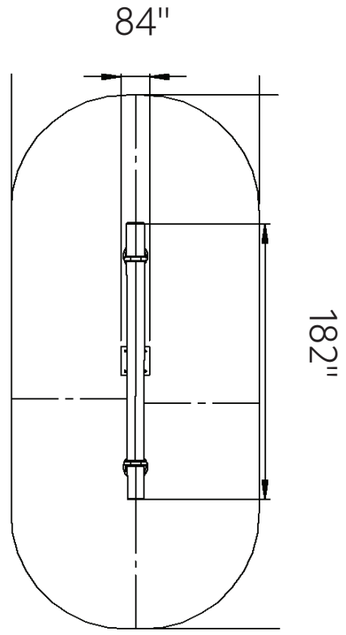



Robinia Wood

European Robinia wood is natural, robust, and durable, particularly suitable for use in outdoor playground equipment. It complies with stringent standards such as FSC, has a smooth and pleasant touch, a natural and authentic appearance, and integrates well with natural surroundings. Its high durability, long lifespan, and being a natural and safe material make it a popular choice for use in playground equipment.



Hand and Foot Holds

Hand and foot holds provide support during play and use of the structure. Players develop their strength and coordination while maintaining stability and security.



Impact Absorber

The impact absorber is a safety element designed to reduce the force of impact and protect players from injuries during play. The absorber helps maintain player safety by minimizing the risk of falls or hard blows.



Log Play Surface

The log play surface provides players with a natural and challenging play space, simulating walking or standing on a tree trunk. The surface combines a natural appearance with stability and safety, encouraging players to develop their balance and coordination while moving.