TSP-5123

Hammock Robinia

The Robinia hammock combines a sturdy wooden frame with a durable polyamide-coated steel mesh, offering a comfortable and relaxing swinging experience. The swing features a dual-axis pivot for smooth and secure motion, suitable for children and adults alike. It's the perfect spot to unwind and savor the moment, while maintaining both comfort and safety.

Robinia Wood:

Rope Cables:





Ages 5-12 | Users 3 | Dimensions L: 10'-11" W: 3' H: 3'-93" | cm L: 94 W: 316 H: 123 | Safety Zone 9'-10.1" / 3'-1" | cm 248 / 91 | Fall Height 7' | 220 cm | Accessible

Emotional Development

Courage- Facing fears and new challenges. Confidence- Building self-confidence and belief in one's personal abilities.

Physical Development

Balancing- Improving balance and posture. Swinging - Strengthening core muscles and enhancing the sense of movement.

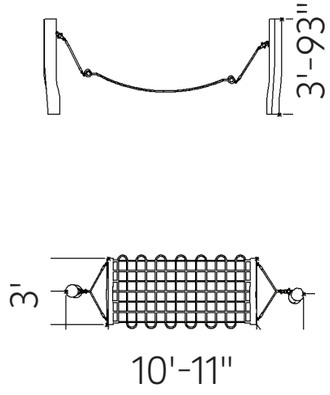

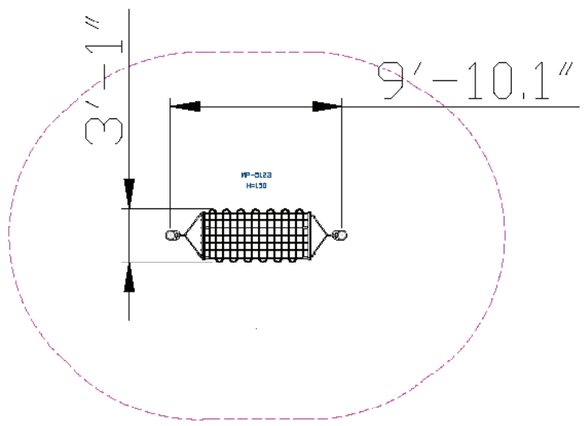



Robinia Wood

European Robinia wood is natural, robust, and durable, particularly suitable for use in outdoor playground equipment. It complies with stringent standards such as FSC, has a smooth and pleasant touch, a natural and authentic appearance, and integrates well with natural surroundings. Its high durability, long lifespan, and being a natural and safe material make it a popular choice for use in playground equipment.



Rope Cables

Rope Cables are made of synthetic polypropylene (PP) fibers combined with a galvanized steel core for improved strength and durability. They meet strict standards such as MATI 1498/1497, ASTM A240, and EN 10088, ensuring durability and safety for use in playground equipment. The cables offer a soft and pleasant touch that does not harm the hands during use and are available in various diameters and colors, allowing for creative and aesthetic design.

Hammock



The hammock offers players a relaxing and comfortable place to swing, while developing motor skills and balance. Playing in the hammock encourages a sense of calm and security, providing an opportunity for players to unwind and connect with their surroundings interactively.

Bearings



Bearings provide smooth and supported internal movement for the element. They ensure smooth and safe movements, enhancing the play experience by reducing friction and effort.