TSP-5145-2

4-Kid Spring Robinia

Robinia wood 4 seat spring

Robinia Wood:

Hanging Jumping Swinging

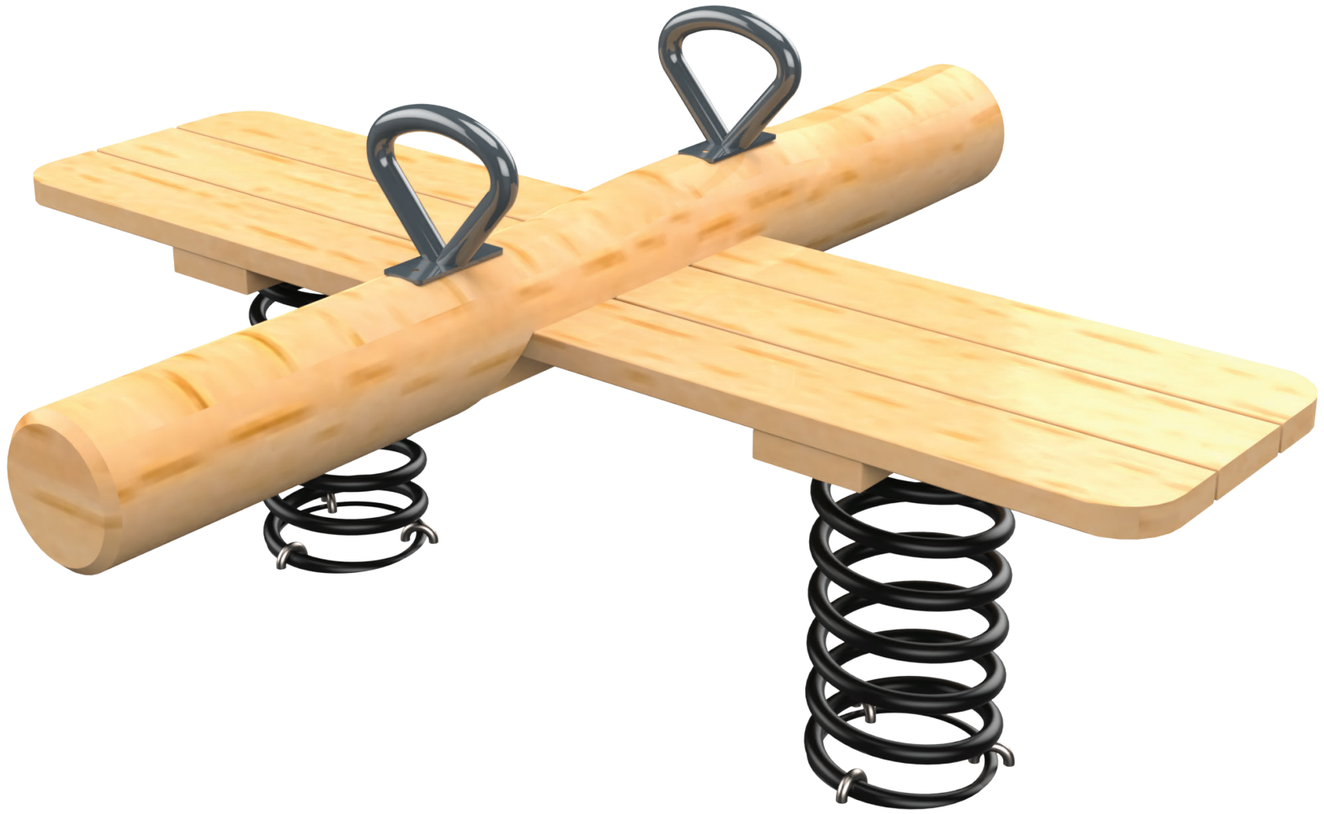

Ages 2-5 | Users 4 | Dimensions L: 4'-73" W: 4'-48" H: 2'-65" | cm L: 148 W: 140 H: 83 | Safety Zone AB1/AB1 | cm AB1 / AB1 | Fall Height 100" | 3'-2" cm | AB1 Accessible

A spring-based swing set for up to four players, made of natural Robinia Wood and galvanized steel elements. The device includes quality spiral springs that provide a unique rocking experience with an intriguing bouncing sensation. The design of the device allows children to enjoy group play while developing balance, coordination, and physical strength. The swing is designed for dynamic and energetic games that help boost self-confidence and communication between children.

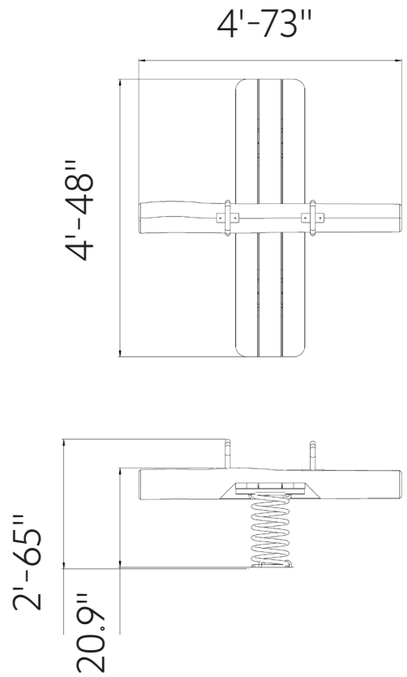

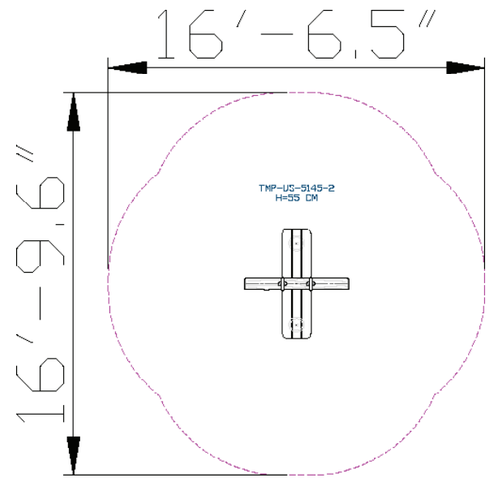





Robinia Wood

European Robinia wood is natural, robust, and durable, particularly suitable for use in outdoor playground equipment. It complies with stringent standards such as FSC, has a smooth and pleasant touch, a natural and authentic appearance, and integrates well with natural surroundings. Its high durability, long lifespan, and being a natural and safe material make it a popular choice for use in playground equipment.



Steel

Steel structure that is strong and durable, oven-painted galvanized and coated with lead-free polyester powder for corrosion and rust resistance. The steel meets strict EN 1176 standards, ensuring high quality and safety. The steel is anti-vandalistic, requires minimal maintenance, and is fully recyclable. The high-quality paint ensures weather resistance and maintains a new appearance over time.

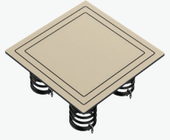

Springy Mat

The springy mat encourages players to jump and move. Playing on the springy mat develops players' strength, coordination, and balance.



Hand and Foot Holds

Hand and foot holds provide support during play and use of the structure. Players develop their strength and coordination while maintaining stability and security.



Log Play Surface

The log play surface provides players with a natural and challenging play space, simulating walking or standing on a tree trunk. The surface combines a natural appearance with stability and safety, encouraging players to develop their balance and coordination while moving.



Springs

The springs are made of high-quality, durable materials, designed safely without pinching or entrapments. They allow for movement and rocking games, developing motor skills, spatial awareness, and a sense of balance.



Motor Development

Core muscle strengthening- Strengthening abdominal and back muscles through challenging equipment.



Cognitive Development

Spatial awareness- Improving the ability to understand and navigate space through mazes and courses.. Creativity- Developing creative thinking and imagination in open and interactive play.



Physical Development

Balancing- Improving balance and posture. Swinging - Strengthening core muscles and enhancing the sense of movement.



Social Development

Cooperation- Encouraging joint work and reaching shared goals. Communication- Developing effective and clear communication skills with playmates. Friendship creation- Creating friendships and strengthening social bonds.



Emotional Development

Courage- Facing fears and new challenges. Confidence- Building self-confidence and belief in one's personal abilities. Independence- Developing independence and the ability to make personal decisions. Resilience- Coping with failure and trying again.