TSP-5149

Mushroom Spring Robinia

Robinia wood spring model Mushroom Spring Robinia

Robinia Wood:

Hanging

Jumping

Swinging



Ages 2-12

Users 2

Dimensions L: 2'-8.6" W: 2'-8.6" H:1'-6.8" | cm L: 85 W: 85 H: 49

Safety Zone 7'/4.7" | 226 cm

Fall Height 100 cm | 3'-2.4"

Accessible

A mushroom-shaped spring structure from natural Robinia Wood, offering an enjoyable bouncing experience. The device combines quality spiral springs that allow children to jump and enjoy a light hovering sensation. The Mushroom Spring contributes to strengthening leg muscles and developing a sense of balance and coordination in children.

Cognitive Development

Concentration- Developing the ability to focus and maintain attention in equipment requiring concentration. Regulation of force- Developing the ability to apply the right amount of force according to the activity.

Physical Development

Balancing- Improving balance and posture.

Motor Development

Foot-eye coordination - Improving coordination and balance through various equipment.

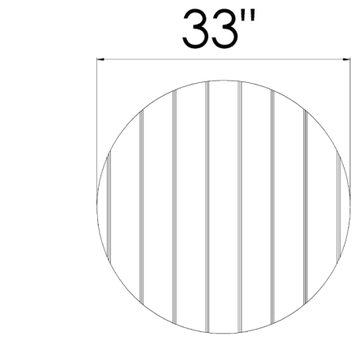

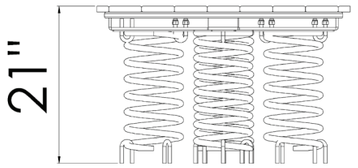

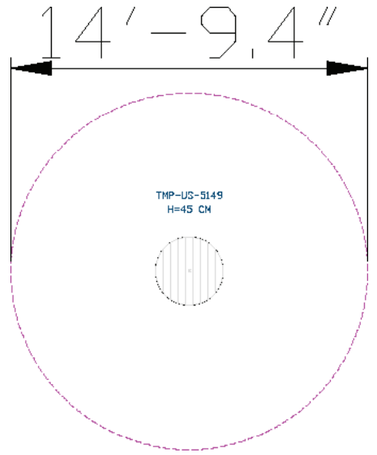





Robinia Wood

European Robinia wood is natural, robust, and durable, particularly suitable for use in outdoor playground equipment. It complies with stringent standards such as FSC, has a smooth and pleasant touch, a natural and authentic appearance, and integrates well with natural surroundings. Its high durability, long lifespan, and being a natural and safe material make it a popular choice for use in playground equipment.



Springy Mat

The springy mat encourages players to jump and move. Playing on the springy mat develops players' strength, coordination, and balance.



Springs

The springs are made of high-quality, durable materials, designed safely without pinching or entrapments. They allow for movement and rocking games, developing motor skills, spatial awareness, and a sense of balance.