TSP-5150

Balance Beam Spring Robinia

A balance beam on a spring made of Robinia Wood. Designed to develop and improve children's balance skills, this playset features a beam made of natural Robinia Wood, supported by two strong and durable springs. The beam's movement allows children to experience balancing and maintaining stability while in constant motion. The device provides a challenging and enjoyable play experience for children of all ages, encouraging them to improve their motor skills through play. The natural design of Robinia Wood blends harmoniously with the playground environment and creates a connection to nature. The stable and durable structure of the device ensures maximum safety and comfort, making it an excellent choice for developing motor skills in a fun and safe way.

Robinia Wood:

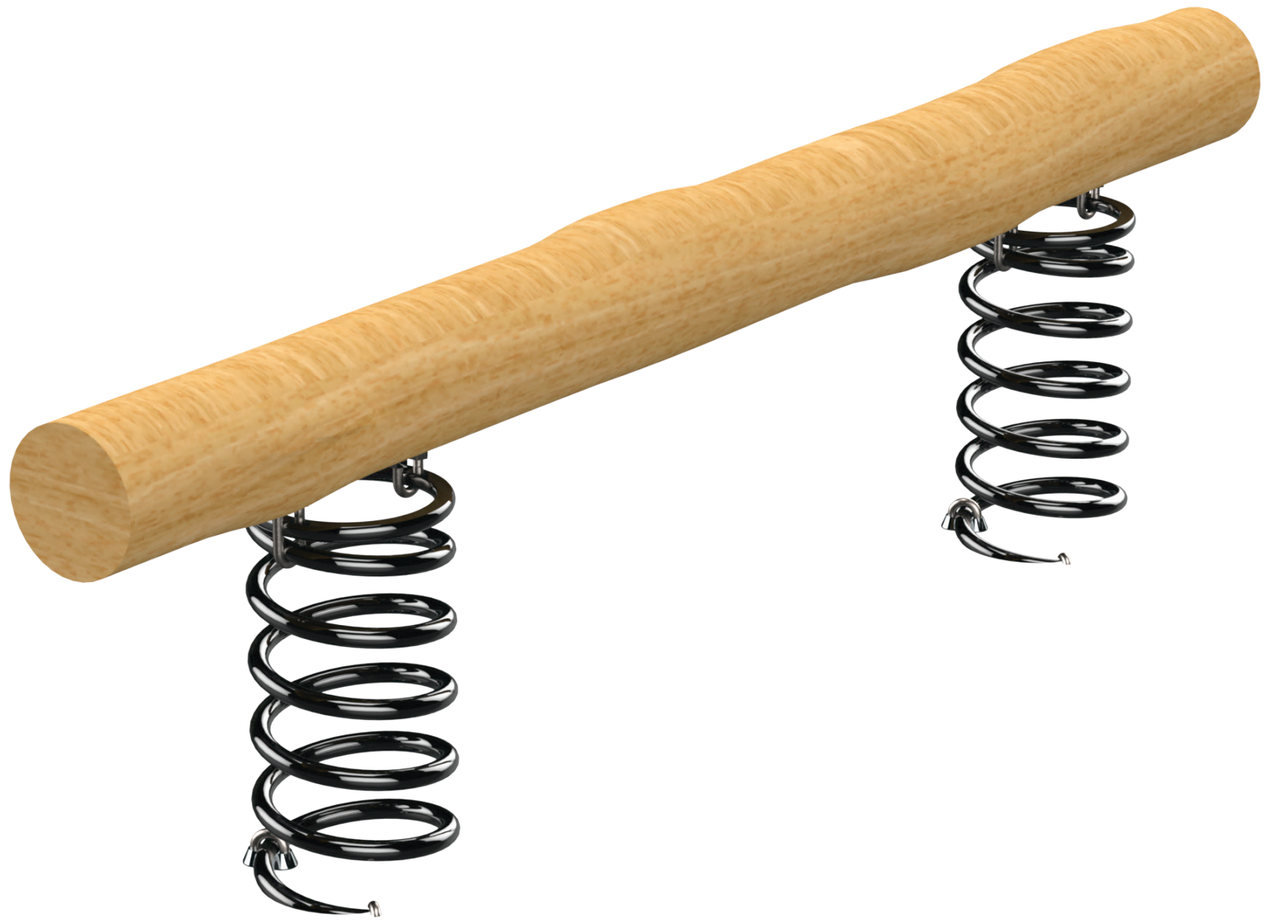

Balancing

Jumping

Ages 2-5

Users 6

Dimensions L: 7.7" W: 4'-5.8" H: 1'-9.9" | cm L: 20 W: 140 H: 57

Safety Zone 16'-7.1"/12'-5.8" | cm 506 / 380

Fall Height 3'-2" | 100 cm

Accessible

Springy Mat



The springy mat encourages players to jump and move. Playing on the springy mat develops players' strength, coordination, and balance.

Log Play Surface



The log play surface provides players with a natural and challenging play space, simulating walking or standing on a tree trunk. The surface combines a natural appearance with stability and safety, encouraging players to develop their balance and coordination while moving.

Springs



The springs are made of high-quality, durable materials, designed safely without pinching or entrapments. They allow for movement and rocking games, developing motor skills, spatial awareness, and a sense of balance.



Robinia Wood

European Robinia wood is natural, robust, and durable, particularly suitable for use in outdoor playground equipment. It complies with stringent standards such as FSC, has a smooth and pleasant touch, a natural and authentic appearance, and integrates well with natural surroundings. Its high durability, long lifespan, and being a natural and safe material make it a popular choice for use in playground equipment.



Motor Development

Core muscle strengthening- Strengthening abdominal and back muscles through challenging equipment.

Cognitive Development

Regulation of force- Developing the ability to apply the right amount of force according to the activity.

Physical Development

Balancing- Improving balance and posture.

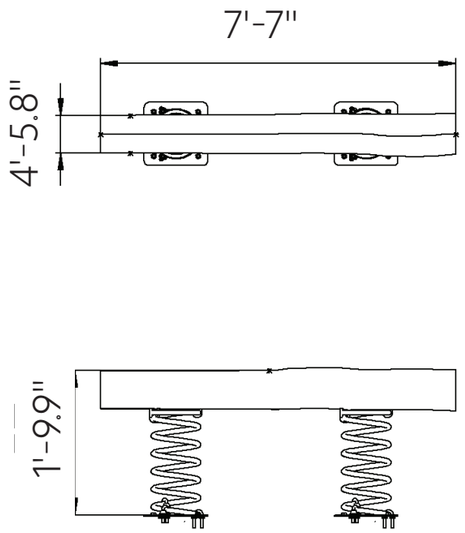

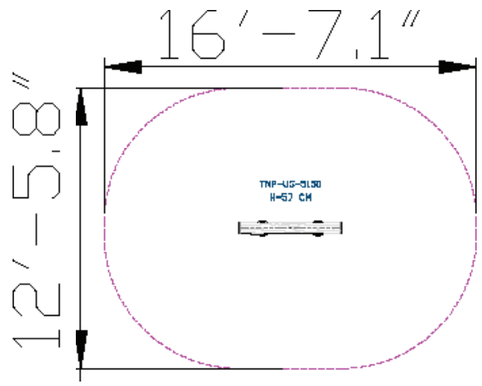

For illustration purposes only

ADA

Balance Beam Spring Robinia TSP-5150 2/2 TM