TMU-US-P9603

Mushroom Bells

Mushroom Bells musical equipment

Steel:

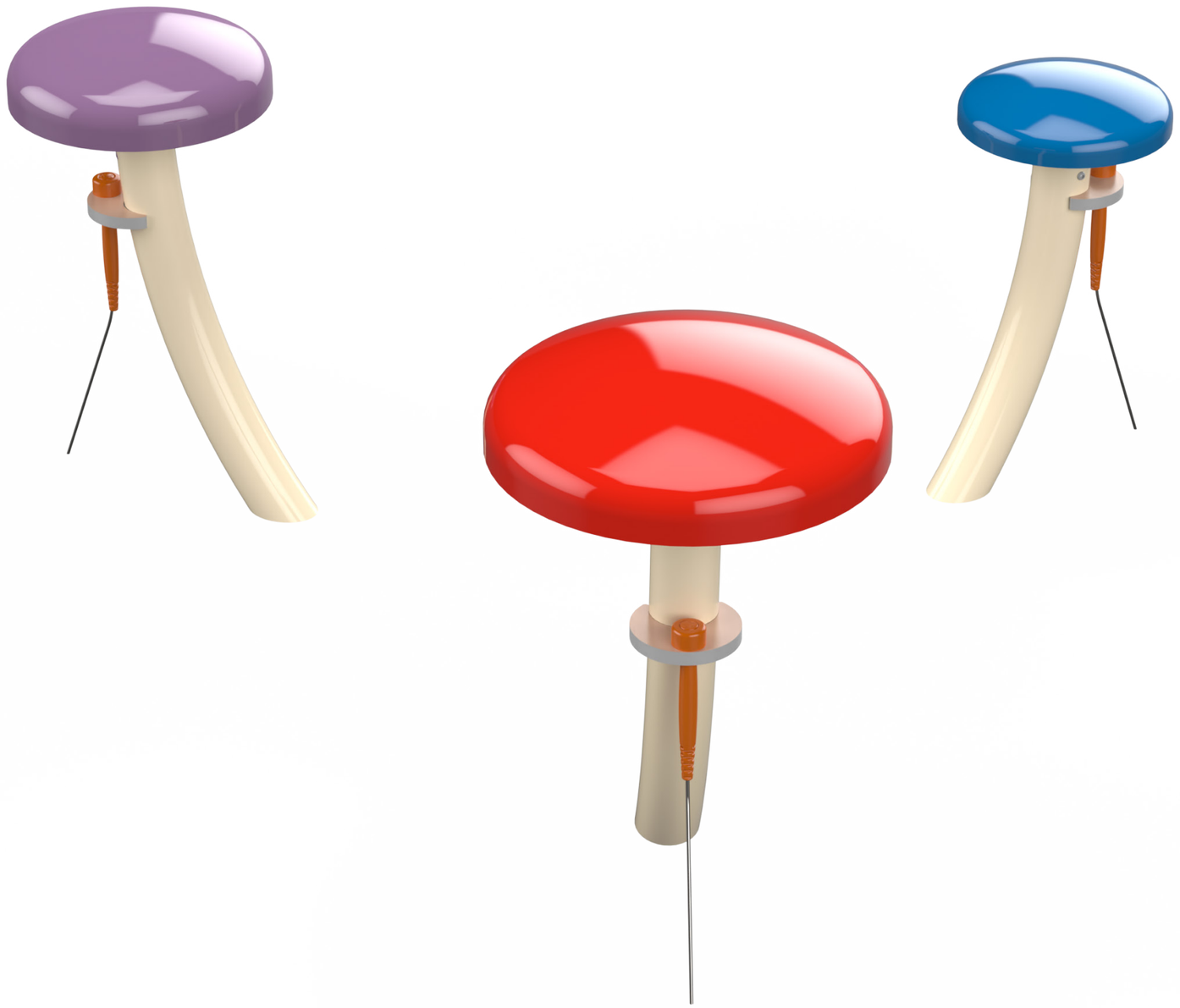

Ages 2-12

Users 3

Dimensions L: 78" W: 70" H:35" | cm L: 41 W: 32 H: 85

Safety Zone 9'-8.1"/10'-2.2" | cm 292 / 310

Accessible+

The mushroom bells are bass bells. Each mushroom produces a different note due to varying diameters. Each mushroom has its own gong connected to its base. This instrument is intuitive and simple to play, complementing the musical garden with its colors and sounds.



Steel

Steel structure that is strong and durable, oven-painted galvanized and coated with lead-free polyester powder for corrosion and rust resistance. The steel meets strict EN 1176 standards, ensuring high quality and safety. The steel is anti-vandalistic, requires minimal maintenance, and is fully recyclable. The high-quality paint ensures weather resistance and maintains a new appearance over time.

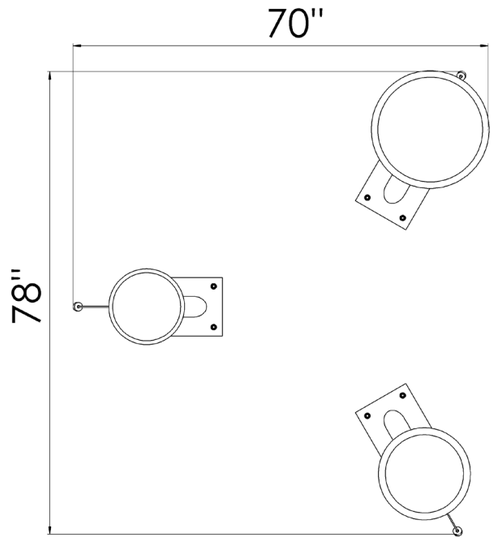

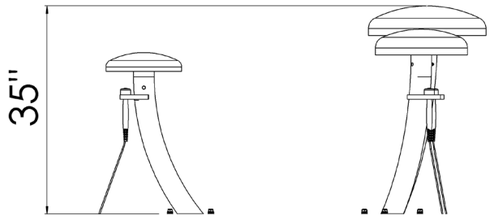



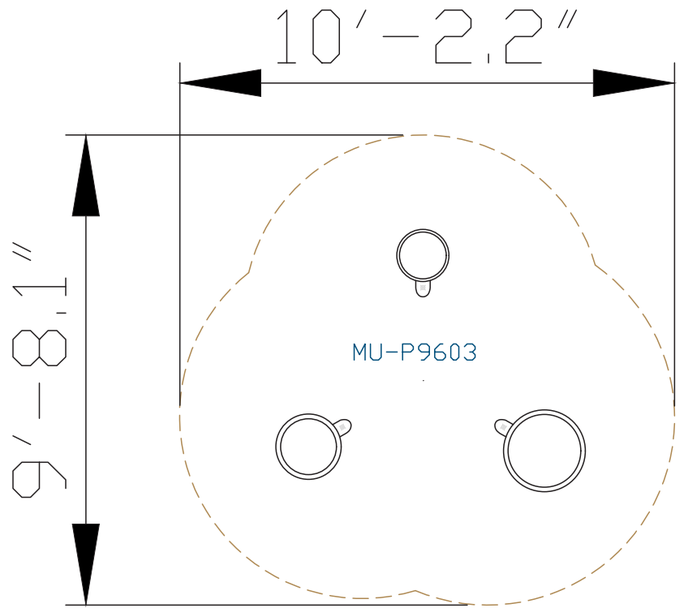



Motor Development

Hand-eye coordination - Developing coordination and precision in activities requiring fine motor skills.

Cognitive Development

Concentration- Developing the ability to focus and maintain attention in equipment requiring concentration. Curiosity - Encouraging exploration and discovery through equipment providing new and unfamiliar experiences. Creativity- Developing creative thinking and imagination in open and interactive play.

Emotional Development

Imagination- Encouraging imagination and creating play worlds. Independence- Developing independence and the ability to make personal decisions. Initiative- Encouraging initiative and taking an active role in play. Perseverance- Encouraging perseverance and repeated attempts.

Sensory Development

Touch development- Diverse sensory experiences through different materials and textures. Hearing development- Stimulating the sense of hearing through the integration of sounds and music.