TMU-US-P9607

Xylophone

Xylophone musical equipment with tuned metal keys

Recycled HDPE:

Steel:

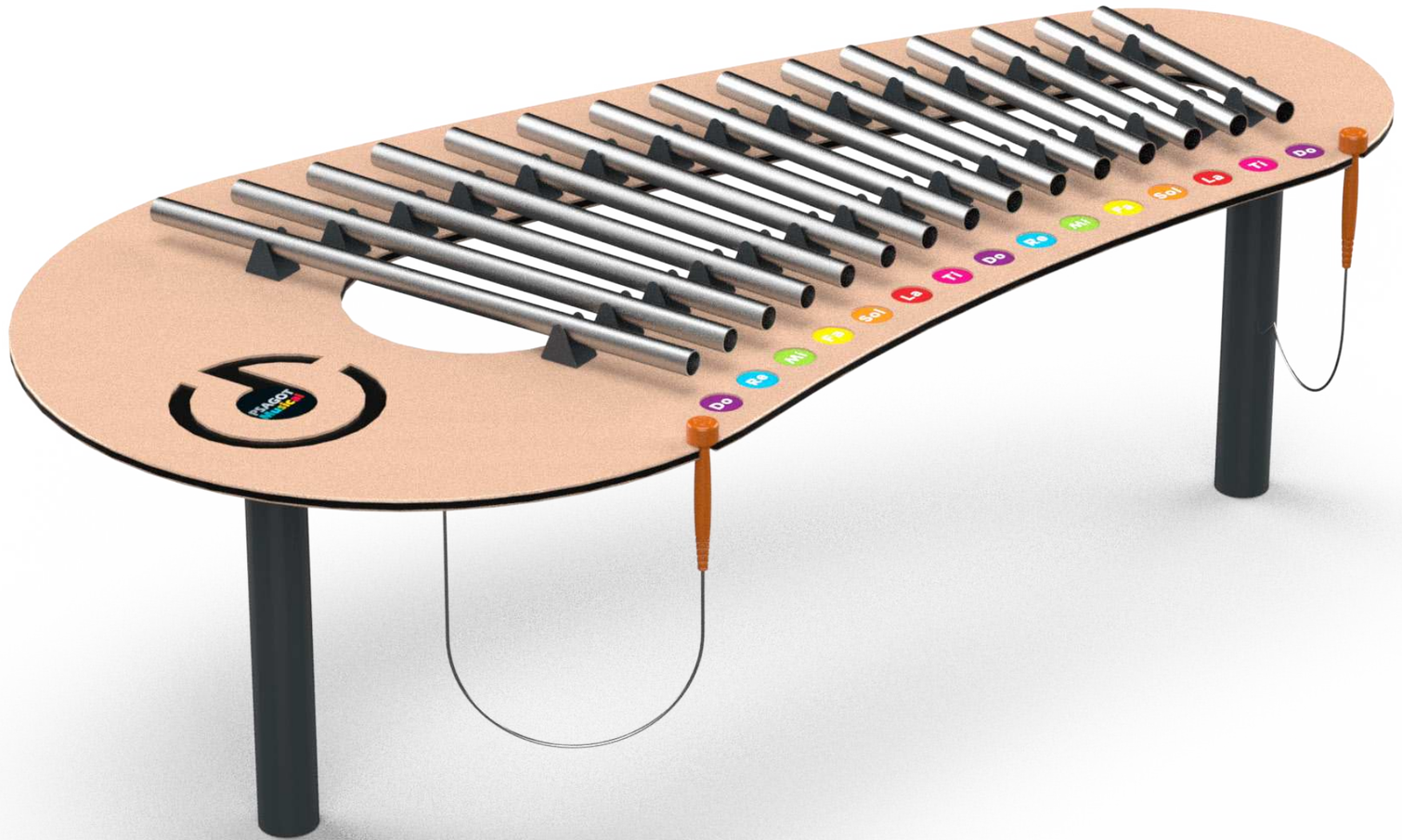

Ages 2-12 | Users 2 | Dimensions L: 90" W: 46" H:31" | cm L: 229 W: 117 H: 78 | Safety Zone 10'-11.2"/7' | cm 333 / 213 | Accessible+

A xylophone with notes arranged by decreasing size but ascending pitch, tuned according to musical notes. Suitable for creating musical harmonies or random drumming. Suitable for all ages.



Recycled HDPE

HDPE (High-Density Polyethylene) is a recycled material made from high-density polyethylene, produced from recycled materials that allows for further recycling. It excels in resistance to UV rays and wear and tear, making it particularly suitable for use in outdoor playground equipment. Its touch is smooth and pleasant, and its appearance is maintained over time. The advantages include high resistance to harsh weather conditions and environmental preservation. The material is capable of absorbing high energy, which helps prevent fractures.



Steel

Steel structure that is strong and durable, oven-painted galvanized and coated with lead-free polyester powder for corrosion and rust resistance. The steel meets strict EN 1176 standards, ensuring high quality and safety. The steel is anti-vandalistic, requires minimal maintenance, and is fully recyclable. The high-quality paint ensures weather resistance and maintains a new appearance over time.

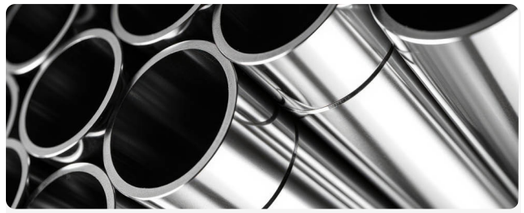

Stainless Steel 316

Stainless Steel 316 is an alloy of iron, chromium, nickel, and molybdenum, providing exceptional resistance to corrosion, rust, and stains. It meets strict playground equipment standards such as ASTM A240 and EN 10088, offering a smooth touch and shiny appearance. Particularly suitable for use in coastal and humid areas, and industrial and urban environments. Even in these challenging areas, Stainless Steel 316 maintains a clean and shiny appearance over time.Steel 316 maintains a clean and shiny appearance over time.



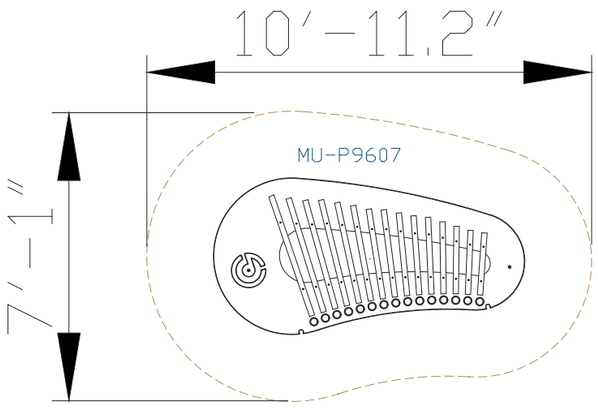

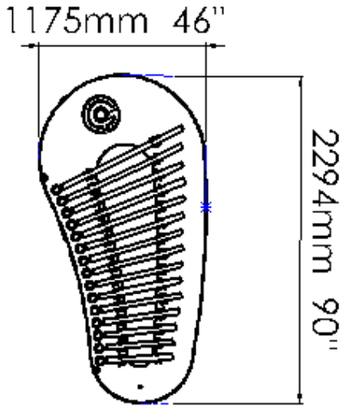

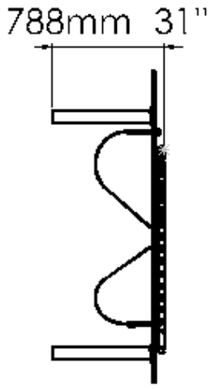

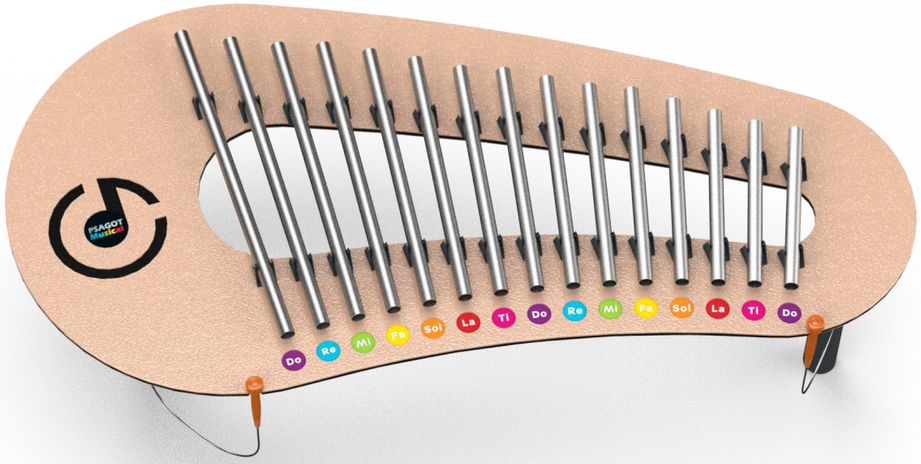

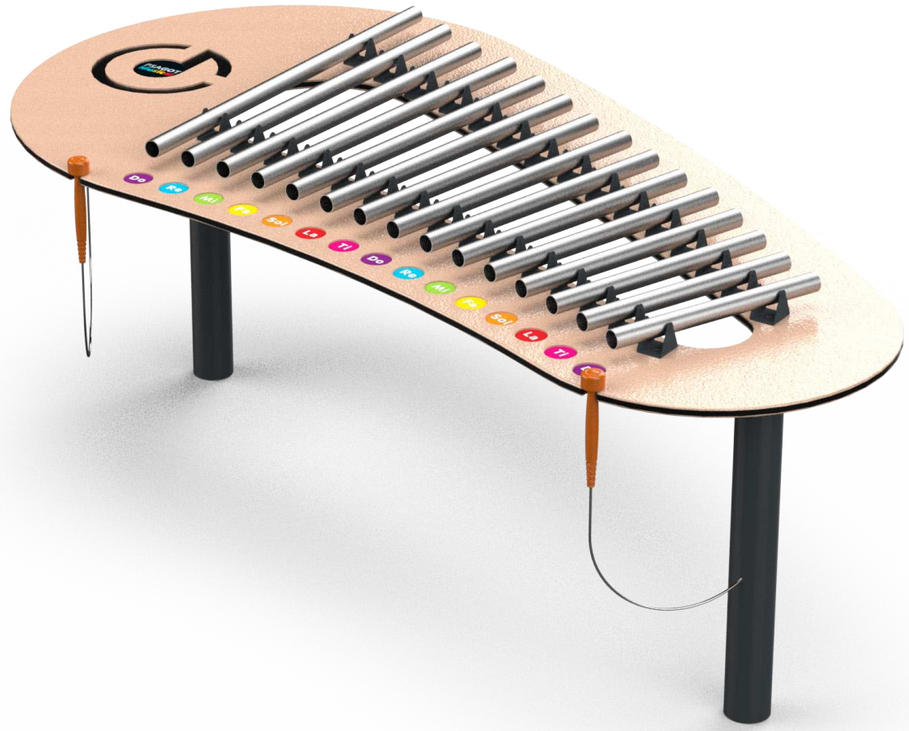

Motor Development

Hand-eye coordination - Developing coordination and precision in activities requiring fine motor skills. Fine motor skills- Developing precise control in small movements through activities requiring fine manual skills.

Cognitive Development

Concentration- Developing the ability to focus and maintain attention in equipment requiring concentration. Curiosity - Encouraging exploration and discovery through equipment providing new and unfamiliar experiences. Creativity- Developing creative thinking and imagination in open and interactive play. Educational content - Integrating educational content within the equipment.

Emotional Development

Imagination- Encouraging imagination and creating play worlds. Independence- Developing independence and the ability to make personal decisions. Patience- Practicing patience and waiting for one's turn. Initiative- Encouraging initiative and taking an active role in play. Perseverance- Encouraging perseverance and repeated attempts.

Sensory Development

Hearing development- Stimulating the sense of hearing through the integration of sounds and music.