TSP-2313

Triple Spinner

A three-person carousel made of galvanized metal with a central axis mounted on durable bearings, suitable for a diverse range of climates. Sealing discs and self-lubrication ease equipment maintenance.

Recycled HDPE:

Steel:

Balancing

Rotation



Ages 2-5

Users 3

Dimensions L: 2'-75" W: 2'-97" H: 3'-2" | L: 93 W: 83 H: 100 cm

Safety Zone 15'-3.5"/15'-3.5" | 465 / 465 cm

Fall Height 3'-2" | 100 cm

Accessible



Seat

A seat that provides a small resting station during play where players can sit and rest. Suitable for short breaks or extended stays. Playing on the seat allows players to take a break from physical activity while maintaining connection with the environment and continuing social interactions.



Hand and Foot Holds

Hand and foot holds provide support during play and use of the structure. Players develop their strength and coordination while maintaining stability and security.

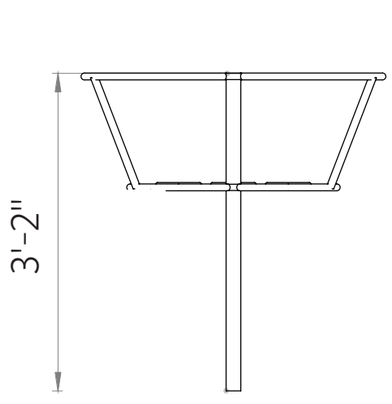





Steel

Steel structure that is strong and durable, oven-painted galvanized and coated with lead-free polyester powder for corrosion and rust resistance. The steel meets strict EN 1176 and MATI 1498/1497 standards, ensuring high quality and safety. The steel is anti-vandalistic, requires minimal maintenance, and is fully recyclable. The high-quality paint ensures weather resistance and maintains a new appearance over time.



Recycled HDPE

HDPE (High-Density Polyethylene) is a recycled material made from high-density polyethylene, produced from recycled materials that allows for further recycling. It excels in resistance to UV rays and wear and tear, making it particularly suitable for use in outdoor playground equipment. Its touch is smooth and pleasant, and its appearance is maintained over time. The advantages include high resistance to harsh weather conditions and environmental preservation. The material is capable of absorbing high energy, which helps prevent fractures.



Physical Development

Spinning - Improving balance and vestibular functions through carousels.



Cognitive Development

Spatial awareness- Improving the ability to understand and navigate space through mazes and courses..