TSP-2520B

Printed Panel B

A printed panel allows the display of information or graphics printed on both sides. Tailored to the customer's needs, the panel can implement a wide range of designs. Serving as a branding element or as a guide, it can incorporate educational, advertising, or artistic content. The panel is extremely durable and is suitable for any playground or public space.

Recycled HDPE:

Steel:



Ages 2-12 | Users 2 | Dimensions L: 3'-5.1" W: 4.2" H: 6'-4.8" | L: 107 W: 11 H: 200 cm | Safety Zone 3.0'-7.9"/6.0'-9.8" | 109 / 206 cm | Fall Height 0" | 0 cm | Accessible

Social Development

Empathy- Developing empathy and the ability to understand and empathize with others' feelings. Respect for boundaries- Learning the importance of respecting personal and social boundaries. Friendship creation- Creating friendships and strengthening social bonds.

Physical Development

Climbing - Strengthening arm and leg muscles, developing fitness and endurance Balancing- Improving balance and posture. Sliding - Strengthening leg and arm muscles and improving coordination.

Motor Development

Core muscle strengthening- Strengthening abdominal and back muscles through challenging equipment. Foot-eye coordination - Improving coordination and balance through various equipment. Hand-eye coordination - Developing coordination and precision in activities requiring fine motor skills.

Cognitive Development

Spatial awareness- Improving the ability to understand and navigate space through mazes and courses.. Regulation of force- Developing the ability to apply the right amount of force according to the activity.

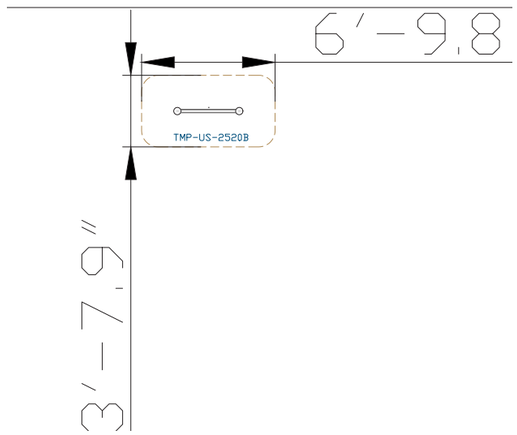

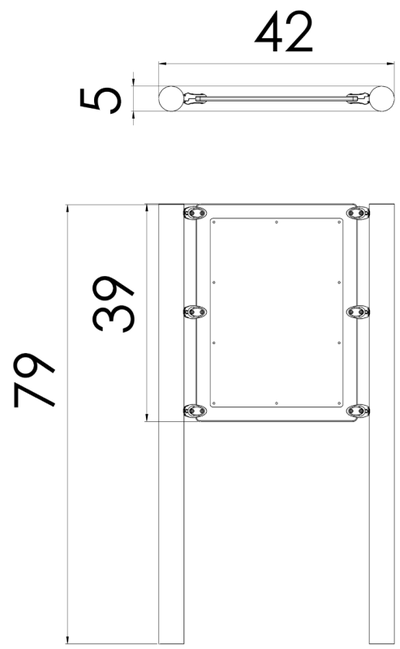



Steel

Steel structure that is strong and durable, oven-painted galvanized and coated with lead-free polyester powder for corrosion and rust resistance. The steel meets strict EN 1176 and MATI 1498/1497 standards, ensuring high quality and safety. The steel is anti-vandalistic, requires minimal maintenance, and is fully recyclable. The high-quality paint ensures weather resistance and maintains a new appearance over time.



Recycled HDPE

HDPE (High-Density Polyethylene) is a recycled material made from high-density polyethylene, produced from recycled materials that allows for further recycling. It excels in resistance to UV rays and wear and tear, making it particularly suitable for use in outdoor playground equipment. Its touch is smooth and pleasant, and its appearance is maintained over time. The advantages include high resistance to harsh weather conditions and environmental preservation. The material is capable of absorbing high energy, which helps prevent fractures.



Printed Panel

The printed panel displays images, patterns, and illustrations that stimulate imagination and encourage players to tell stories and create narratives. Playing with the panel develops creative and cognitive skills, promotes literacy, curiosity, and learning.



Connectors

The connectors in our play structures are designed to securely and safely join parts of the structure. They are made of durable and high-quality materials, ensuring long-.term durability without wear