TSP-2565

Flower Phone

Flower Phone

Recycled HDPE:

Steel:



Ages 2-12

Users 2

Dimensions L: 1'-4.1" W: 3' H: 3'-10.1" | cm L: 94 W: 42 H: 120 cm

Safety Zone 6'-6.9"/6'-0.3" | 198 / 183 cm

Fall Height 0" | 0" cm

Accessible

Flower-shaped tubes to carry voices across wide spans of the playground. An underground pipe connects two flower tubes located at a distance from each other in the garden area, allowing sound to be transmitted from one tube to the other.

Motor Development

Core muscle strengthening- Strengthening abdominal and back muscles through challenging equipment. Foot-eye coordination - Improving coordination and balance through various equipment. Hand-eye coordination - Developing coordination and precision in activities requiring fine motor skills.

Cognitive Development

Spatial awareness- Improving the ability to understand and navigate space through mazes and courses.. Regulation of force- Developing the ability to apply the right amount of force according to the activity.

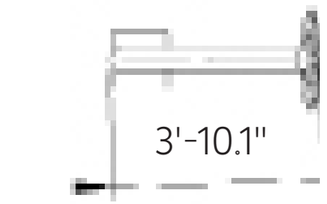

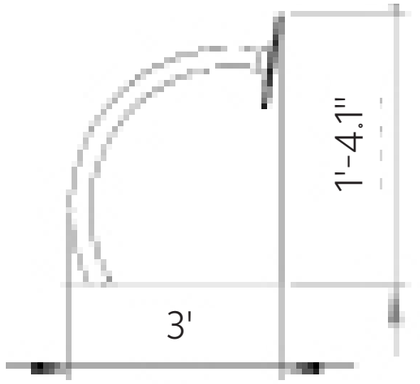

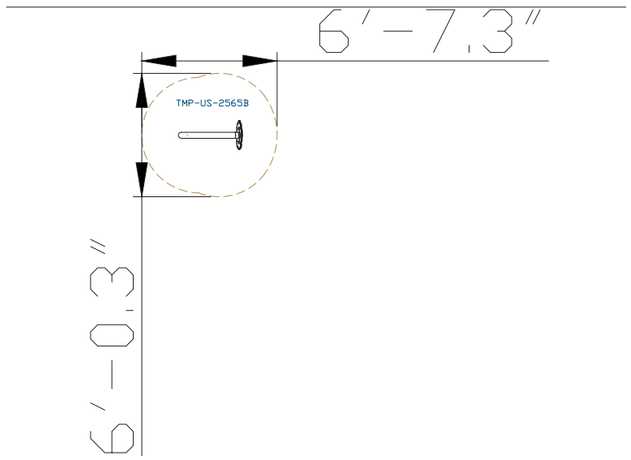





Steel

Steel structure that is strong and durable, oven-painted galvanized and coated with lead-free polyester powder for corrosion and rust resistance. The steel meets strict EN 1176 and MATI 1498/1497 standards, ensuring high quality and safety. The steel is anti-vandalistic, requires minimal maintenance, and is fully recyclable. The high-quality paint ensures weather resistance and maintains a new appearance over time.



Recycled HDPE

HDPE (High-Density Polyethylene) is a recycled material made from high-density polyethylene, produced from recycled materials that allows for further recycling. It excels in resistance to UV rays and wear and tear, making it particularly suitable for use in outdoor playground equipment. Its touch is smooth and pleasant, and its appearance is maintained over time. The advantages include high resistance to harsh weather conditions and environmental preservation. The material is capable of absorbing high energy, which helps prevent fractures.

Sound Element

The sound element allows players to create and listen to sounds, adding an interactive and experiential dimension to the play. The element requires at least two players, encouraging social and creative play. It fosters the development of rhythm and timing and promotes an understanding of the propagation of sound waves between participants.