# TSP-2585

## Photo Cutout Board

Photo stand-in stations for good clean fun and a souvenir from the park - With no time like the present, what the lens didn't capture - it's as if it never happened. Our stand-in boards are a great experience and are suitable for children who love to dress up and hide, while also allowing parents to document the visit and pass it on to others, who must then also come to your park, of course :) The art for the stations can be chosen by the customer, with the addition of unique text and the local authority's logo featured at no extra charge.

Recycled HDPE:

Steel:



Ages 2-12

Users 2

Dimensions L: 3'-5.1" W: 4.2" H: 6'-4.8" | L: 107 W: 11 H: 200 cm

Safety Zone 3'-7.9"/6'-9.8" | 109/ 206 cm

Fall Height 0" | 0 cm

Accessible

### Motor Development

Foot-eye coordination - Improving coordination and balance through various equipment. Hand-eye coordination - Developing coordination and precision in activities requiring fine motor skills.

### Social Development

Cooperation- Encouraging joint work and reaching shared goals.

Communication- Developing effective and clear communication skills with playmates.



## Photo Panel

The photo panel offers a unique play experience where players can insert their faces into illustrated characters on the panel through a designated opening. The panel encourages social interaction as friends and family take photos of the players, making them appear as part of the illustrated character, which enhances the sense of belonging and shared fun. This panel provides players with an opportunity to express themselves, create shared memories, and enjoy funny and unique experiences.



## Connectors

The connectors in our play structures are designed to securely and safely join parts of the structure. They are made of durable and high-quality materials, ensuring long-.term durability without wear

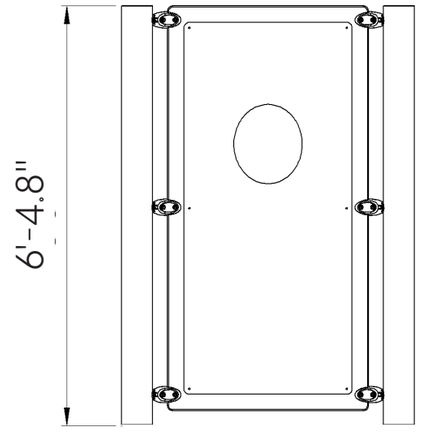


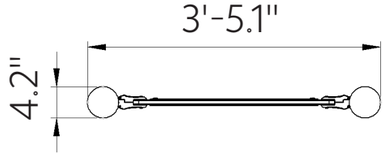






## Steel

Steel structure that is strong and durable, oven-painted galvanized and coated with lead-free polyester powder for corrosion and rust resistance. The steel meets strict EN 1176 and MATI 1498/1497 standards, ensuring high quality and safety. The steel is anti-vandalistic, requires minimal maintenance, and is fully recyclable. The high-quality paint ensures weather resistance and maintains a new appearance over time.



## Recycled HDPE

HDPE (High-Density Polyethylene) is a recycled material made from high-density polyethylene, produced from recycled materials that allows for further recycling. It excels in resistance to UV rays and wear and tear, making it particularly suitable for use in outdoor playground equipment. Its touch is smooth and pleasant, and its appearance is maintained over time. The advantages include high resistance to harsh weather conditions and environmental preservation. The material is capable of absorbing high energy, which helps prevent fractures.

