TSP-3104-2

4-Way Fitness

Fittness sructure 4 challenges

Steel:

Rope Cables:

Balancing

Climbing

Jumping



Ages 5-12

Users 6

Dimensions L: 5'-1.1" W: 5-1.1" H: 6'-5.6" | L: 159 W: 159 H: 202 cm

Safety Zone 17'-3.6"/17'-3.6" | 526 / 526 cm

Fall Height 6'-8.6" | 210 cm

Accessible

The square-shaped 4-Way Fitness structure is designed to develop physical fitness by combining several elements that challenge users in climbing and grippin exercises to improve endurance. Featuring a climbing net and a vertical ladder, it invites users to work on strength, flexibility, and balance, creating an intens and focused workout experience.

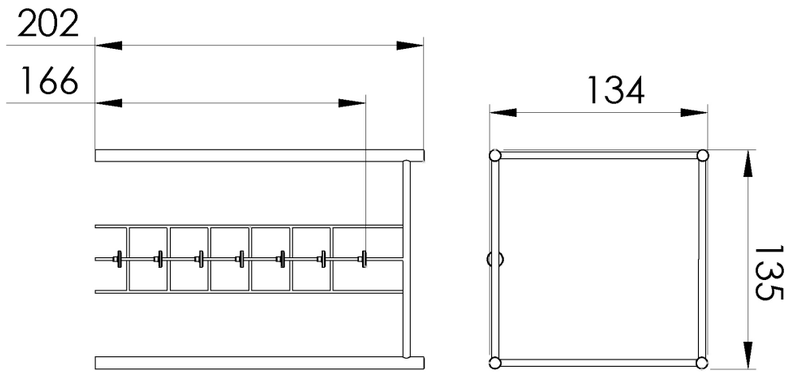

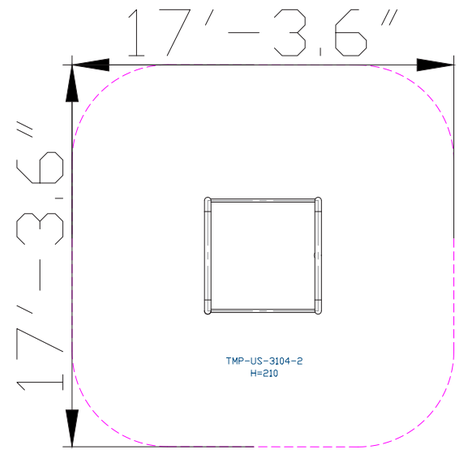





Steel

Steel structure that is strong and durable, oven-painted galvanized and coated with lead-free polyester powder for corrosion and rust resistance. The steel meets strict EN 1176 and MATI 1498/1497 standards, ensuring high quality and safety. The steel is anti-vandalistic, requires minimal maintenance, and is fully recyclable. The high-quality paint ensures weather resistance and maintains a new appearance over time.



Rope Cables

Rope Cables are made of synthetic polypropylene (PP) fibers combined with a galvanized steel core for improved strength and durability. They meet strict standards such as MATI 1498/1497, ASTM A240, and EN 10088, ensuring durability and safety for use in playground equipment. The cables offer a soft and pleasant touch that does not harm the hands during use and are available in various diameters and colors, allowing for creative and aesthetic design.



Ladder

The ladder provides vertical access to the play structure and encourages players to develop physical skills such as strength, coordination, and balance. Climbing the ladder promotes courage and independence as players face heights and new challenges. The ladder strengthens hand and arm muscles and encourages .proper body use



Hand and Foot Holds

Hand and foot holds provide support during play and use of the structure. Players develop their strength and coordination while maintaining stability and security.

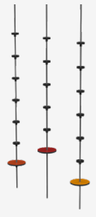

Designed Climbing Element

The designed climbing element combines physical challenge with a unique and inviting design. Players develop physical skills such as strength, coordination, and balance while playing in a creative and designed environment. The unique design encourages players to play and explore, fostering their imagination and creativity.



Motor Development

Foot-eye coordination - Improving coordination and balance through various equipment. Hand-eye coordination - Developing coordination and precision in activities requiring fine motor skills.



Cognitive Development

Spatial awareness- Improving the ability to understand and navigate space through mazes and courses.



Emotional Development

Courage- Facing fears and new challenges. Confidence- Building self-confidence and belief in one's personal abilities. Independence- Developing independence and the ability to make personal decisions. Resilience- Coping with failure and trying again. Perseverance- Encouraging perseverance and repeated attempts. Achievement- Developing a sense of accomplishment and satisfaction from success in challenging equipment.



Social Development

Cooperation- Encouraging joint work and reaching shared goals. Communication- Developing effective and clear communication skills with playmates.



Physical Development

Jumping- Improving leg strength and balance.