TSP-3106

3-Way Fitness

Fittness structure 3 challenges

Steel:

Rope Cables:

Balancing

Hanging

Climbing

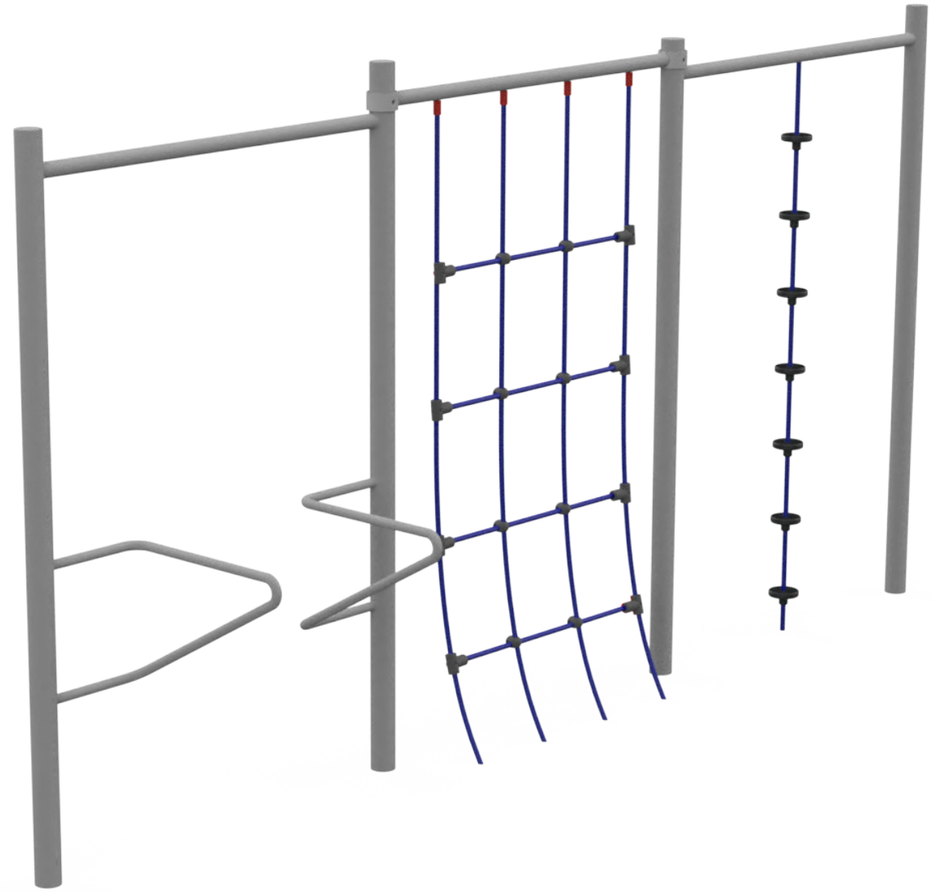

Ages 5-12

Users 3

Dimensions L: 12'-6.1" W: 2.7" H: 7'-0.5" | L: 391 W: 7 H: 220 cm

Safety Zone 24'-10.2"/15'-9" | 757 / 480 cm

Fall Height 6'-86" | 210 cm

Accessible

This fitness structure is built from three connected elements:
A high pull-up bar, low pull-up bar and hanging rings
Two of the elements are positioned at a height, allowing users to train their upper body without their feet touching the ground, while the third element is designed for low-height pull-up exercises.
This apparatus is ideal for developing fitness, strengthening arm muscles, and enhancing shoulder strength. It encourages persistence and teaches how to handle falls and frustrations in a safe environment.

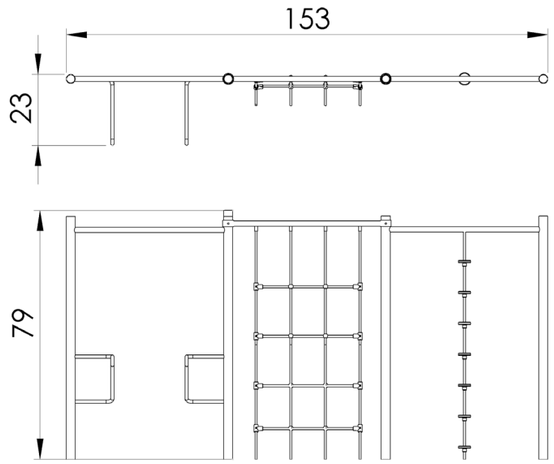

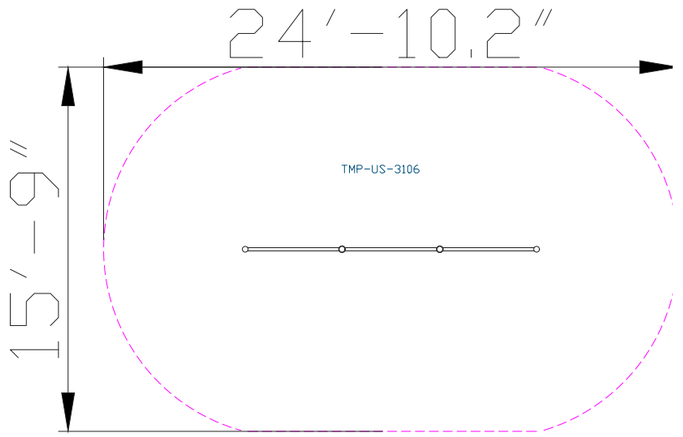





Steel

Steel structure that is strong and durable, oven-painted galvanized and coated with lead-free polyester powder for corrosion and rust resistance. The steel meets strict EN 1176 and MATI 1498/1497 standards, ensuring high quality and safety. The steel is anti-vandalistic, requires minimal maintenance, and is fully recyclable. The high-quality paint ensures weather resistance and maintains a new appearance over time.



Rope Cables

Rope Cables are made of synthetic polypropylene (PP) fibers combined with a galvanized steel core for improved strength and durability. They meet strict standards such as MATI 1498/1497, ASTM A240, and EN 10088, ensuring durability and safety for use in playground equipment. The cables offer a soft and pleasant touch that does not harm the hands during use and are available in various diameters and colors, allowing for creative and aesthetic design.

Hand and Foot Holds



Hand and foot holds provide support during play and use of the structure. Players develop their strength and coordination while maintaining stability and security.

Fitness Element



The fitness element allows players to develop their physical fitness through various activities such as climbing, pushing, and pulling. It encourages improvements in strength, endurance, and coordination, while emphasizing enjoyable and challenging physical activity.

Rope ladder



The rope ladder provides vertical access to the play structure and encourages players to develop physical skills such as strength, coordination, and balance. Climbing the rope ladder strengthens hand and leg muscles and develops a sense of balance. The ladder encourages players to face challenges and develop flexibility and agility.

Designed Climbing Element

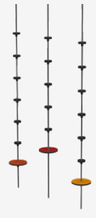

The designed climbing element combines physical challenge with a unique and inviting design. Players develop physical skills such as strength, coordination, and balance while playing in a creative and designed environment. The unique design encourages players to play and explore, fostering their imagination and creativity.



Motor Development

Foot-eye coordination - Improving coordination and balance through various equipment. Hand-eye coordination - Developing coordination and precision in activities requiring fine motor skills.



Cognitive Development

Spatial awareness- Improving the ability to understand and navigate space through mazes and courses..



Emotional Development

Courage- Facing fears and new challenges. Confidence- Building self-confidence and belief in one's personal abilities. Independence- Developing independence and the ability to make personal decisions. Resilience- Coping with failure and trying again. Perserverance- Encouraging perserverance and repeated attempts. Achievement- Developing a sense of accomplishment and satisfaction from success in challenging equipment.



Social Development

Cooperation- Encouraging joint work and reaching shared goals. Communication- Developing effective and clear communication skills with playmates.



Physical Development

Jumping- Improving leg strength and balance.