TSP-3407

Inclusive Balance Course

A fabricated metal walking course with accessible railings, featuring surfaces at different angles for path play. The balance course allows for circular play based around walking, skipping, running or jumping, and thanks to the railing, it can also incorporate hand and foot hanging. The course helps develop balance, posture, and movement, and practices repetition and persistence. Great for introducing a playful way to get exercise and strengthen muscles for those with disabilities.

Recycled HDPE:

Steel:

Balancing Rotation Climbing Jumping

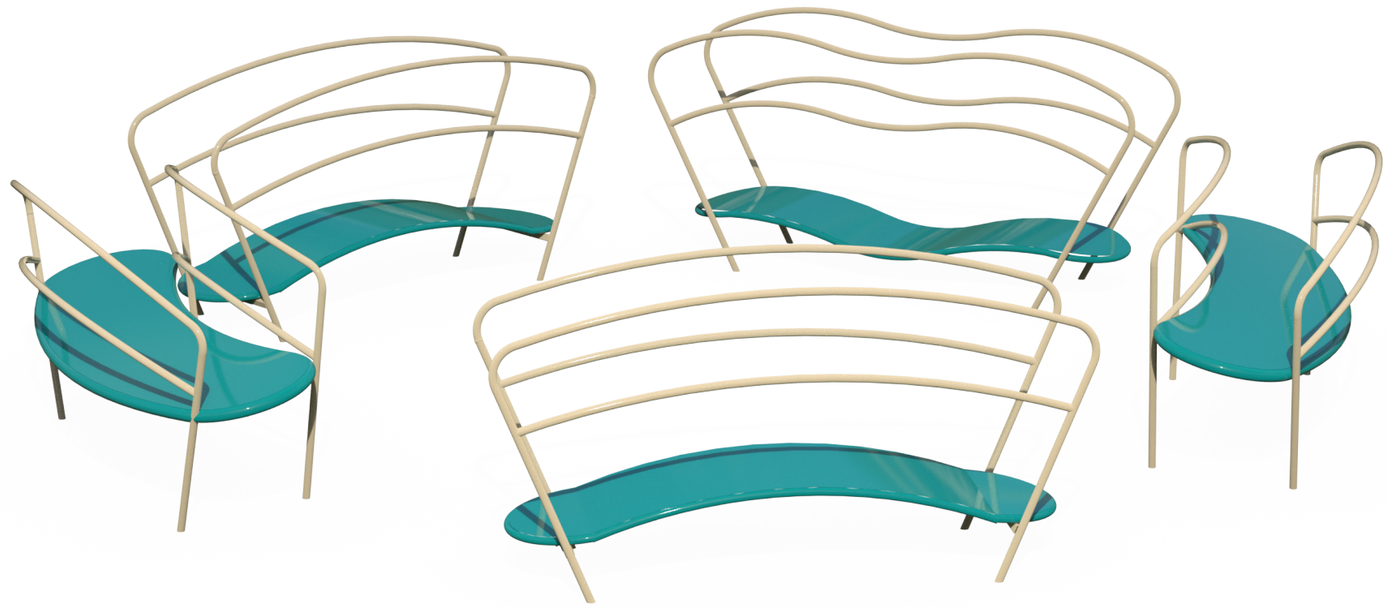

Ages 2-5 | Users 15 | Dimensions L: 15'-9.3" W: 15'-1.6" H: 3'-3.9" | L: 493 W: 473 H: 104 cm | Safety Zone 28'-7.9"/28'-7.9" | 871/ 871 cm | Fall Height 1'-9.1" | 55 cm | Accessible



Transfer Accessibility

Suitable for transfer accessibility to ensure convenient and safe access for children with disabilities, including smooth transitions from a wheelchair to the play structure and back.



Tread Surface

The tread surface provides support and safety during play on the structure. The surface is designed to prevent slipping and improve players' stability and security.



Hand and Foot Holds

Hand and foot holds provide support during play and use of the structure. Players develop their strength and coordination while maintaining stability and security.

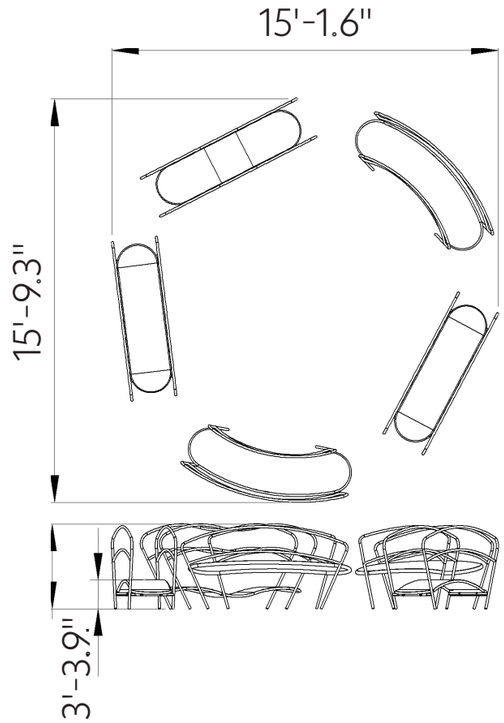





Steel

Steel structure that is strong and durable, oven-painted galvanized and coated with lead-free polyester powder for corrosion and rust resistance. The steel meets strict EN 1176 and MATI 1498/1497 standards, ensuring high quality and safety. The steel is anti-vandalistic, requires minimal maintenance, and is fully recyclable. The high-quality paint ensures weather resistance and maintains a new appearance over time.



Recycled HDPE

HDPE (High-Density Polyethylene) is a recycled material made from high-density polyethylene, produced from recycled materials that allows for further recycling. It excels in resistance to UV rays and wear and tear, making it particularly suitable for use in outdoor playground equipment. Its touch is smooth and pleasant, and its appearance is maintained over time. The advantages include high resistance to harsh weather conditions and environmental preservation. The material is capable of absorbing high energy, which helps prevent fractures.

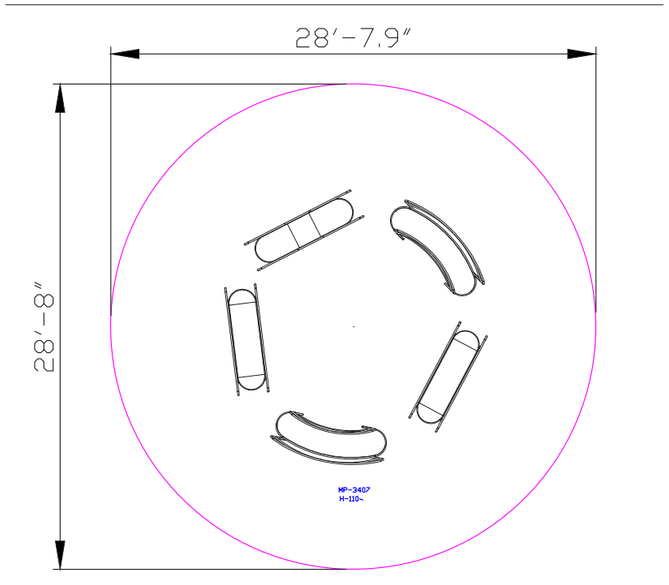

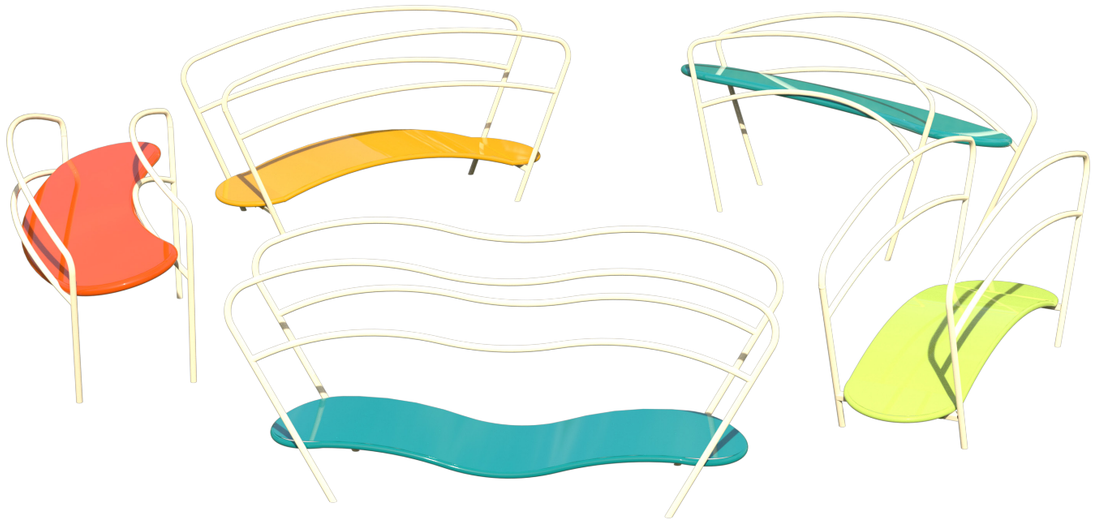

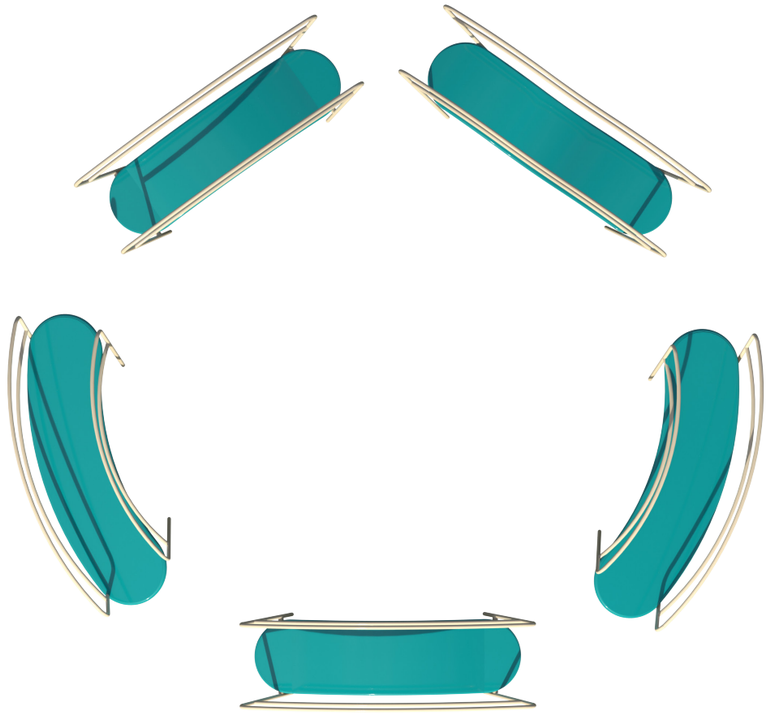

Motor Development

Core muscle strengthening- Strengthening abdominal and back muscles through challenging equipment. Foot-eye coordination - Improving coordination and balance through various equipment. Hand-eye coordination - Developing coordination and precision in activities requiring fine motor skills.

Cognitive Development

Spatial awareness- Improving the ability to understand and navigate space through mazes and courses.

Emotional Development

Courage- Facing fears and new challenges. Confidence- Building self-confidence and belief in one's personal abilities. Independence- Developing independence and the ability to make personal decisions. Patience- Practicing patience and waiting for one's turn. Empathy- Developing the ability to understand and accept differences and complexities. Resilience- Coping with failure and trying again.

Social Development

Communication- Developing effective and clear communication skills with playmates Conflict resolution- Learning to resolve disputes and manage conflicts positively. Empathy- Developing empathy and the ability to understand and empathize with others' feelings.

Physical Development

Balancing- Improving balance and posture.