TSP-3509

Semicircle Fitness

Arched fitness structure for jumping and climbing

Recycled HDPE:
Stainless Steel 316:

Balancing
Climbing
Jumping



Ages 5-12
Users 2
Dimensions L: 3'-6.2" W: 5.8" H: 2'-7.1" | L: 110 W: 15 H: 81 cm
Safety Zone 17'-6.7"/13'-6.7" | 535 / 413 cm
Fall Height 55" | 1'-9.1" cm
Accessible

A stylized hoop-shaped play structure for climbing, chin-ups, and balance. The device allows for both imagination and creativity in its use. Develops balance, arm and leg muscles.

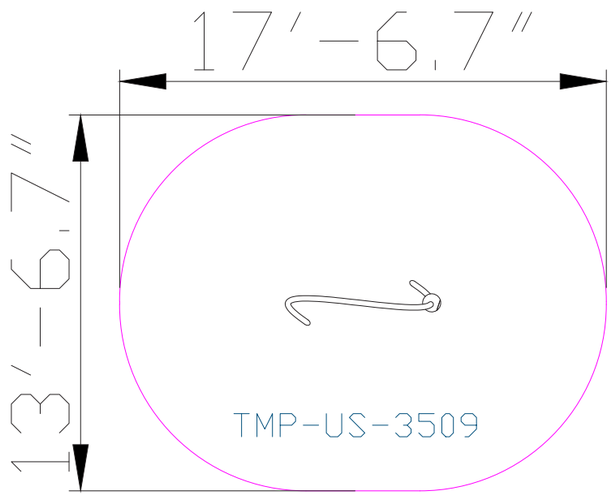

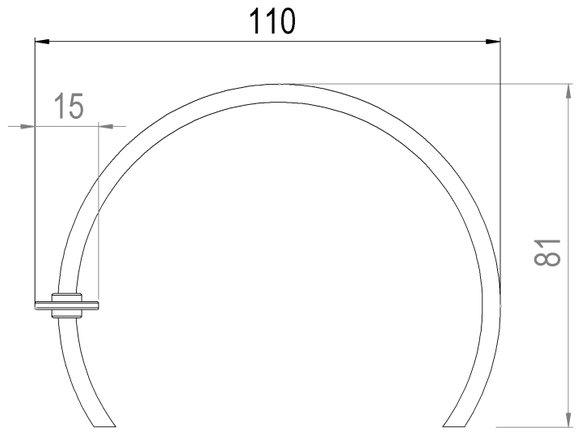





Stainless Steel 316

Stainless Steel 316 is an alloy of iron, chromium, nickel, and molybdenum, providing exceptional resistance to corrosion, rust, and stains. It meets strict playground equipment standards such as MATI 1498/1497, ASTM A240, and EN 10088, offering a smooth touch and shiny appearance. Particularly suitable for use in coastal and humid areas, and industrial and urban environments. Even in these challenging areas, Stainless Steel 316 maintains a clean and shiny appearance over time.



Recycled HDPE

HDPE (High-Density Polyethylene) is a recycled material made from high-density polyethylene, produced from recycled materials that allows for further recycling. It excels in resistance to UV rays and wear and tear, making it particularly suitable for use in outdoor playground equipment. Its touch is smooth and pleasant, and its appearance is maintained over time. The advantages include high resistance to harsh weather conditions and environmental preservation. The material is capable of absorbing high energy, which helps prevent fractures.



Hand and Foot Holds

Hand and foot holds provide support during play and use of the structure. Players develop their strength and coordination while maintaining stability and security.



Moving Platform

The moving platform provides a dynamic movement experience that develops players' motor skills and coordination. Playing on the moving platform encourages stability and self-confidence while moving.



Motor Development

Foot-eye coordination - Improving coordination and balance through various equipment. Hand-eye coordination - Developing coordination and precision in activities requiring fine motor skills.



Cognitive Development

Concentration- Developing the ability to focus and maintain attention in equipment requiring concentration. Spatial awareness- Improving the ability to understand and navigate space through mazes and courses.. Regulation of force- Developing the ability to apply the right amount of force according to the activity.



Emotional Development

Courage- Facing fears and new challenges. Confidence- Building self-confidence and belief in one's personal abilities. Independence- Developing independence and the ability to make personal decisions. Resilience- Coping with failure and trying again. Perseverance- Encouraging perseverance and repeated attempts. Achievement- Developing a sense of accomplishment and satisfaction from success in challenging equipment.



Social Development

Empathy- Developing empathy and the ability to understand and empathize with others' feelings. Respect for boundaries- Learning the importance of respecting personal and social boundaries. Friendship creation- Creating friendships and strengthening social bonds.



Physical Development

Climbing - Strengthening arm and leg muscles, developing fitness and endurance Jumping- Improving leg strength and balance. Balancing- Improving balance and posture.