TSP-5129

Robusta

Robusta- Robinia wood fitness course

Robinia Wood:
Rope Cables:

Balancing

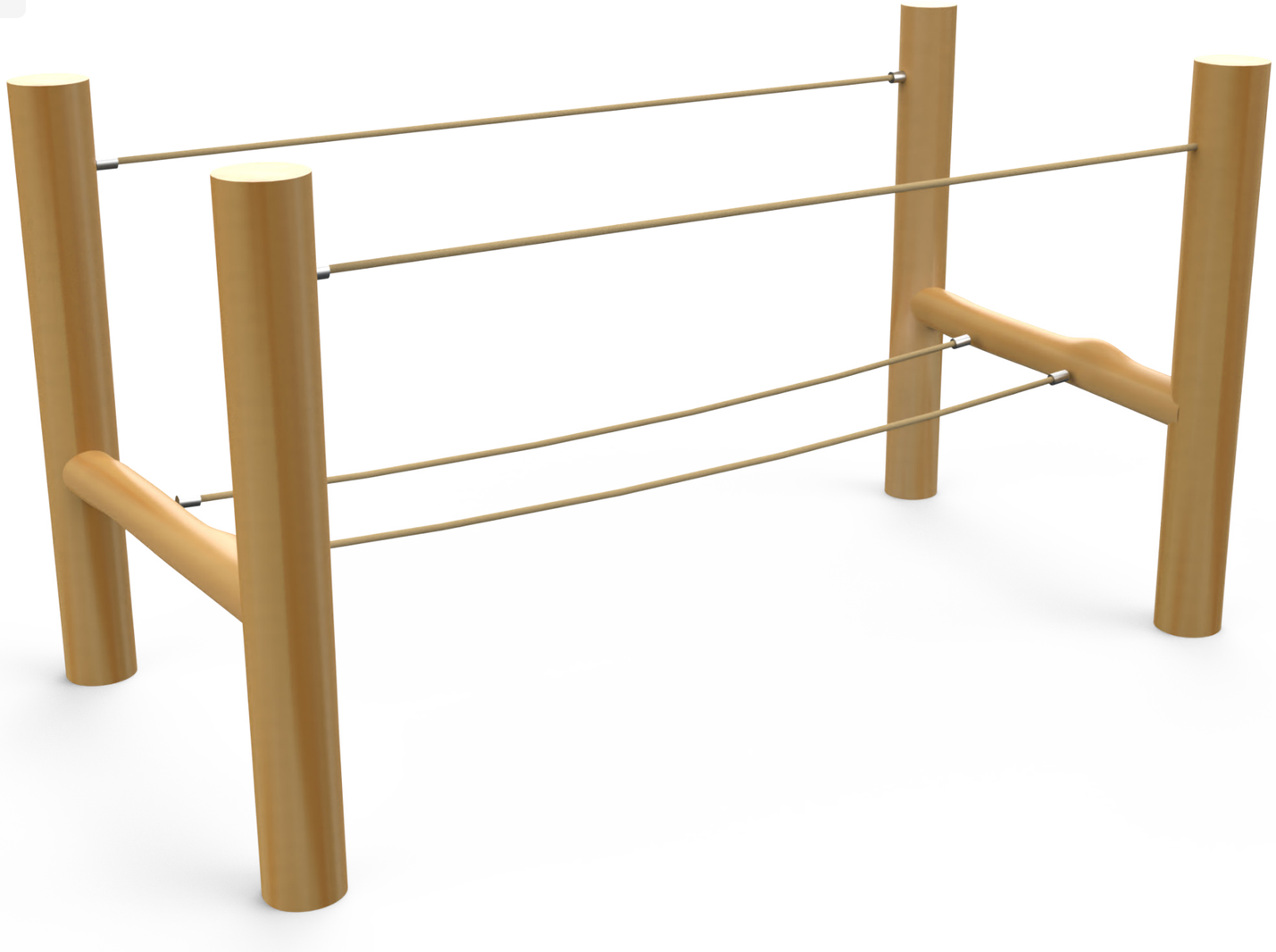

Ages 5-12

Users 4

Dimensions L: 9'-3.4" W: 4'-4.2" H: 5'-9.9" | L: 290 W: 136 H: 182 cm

Safety Zone 20'-8.7"/16'-6" | 632 / 503 cm

Fall Height 3'-2.4" | 100 cm

Accessible

Robusta is a challenging fitness course made from Robinia Wood, designed to develop balance and stability. The course offers a path of tight ropes, adding an element of challenge and body control. The natural wooden structure blends harmoniously with the playground surroundings, providing children with a fun and challenging play experience.



Robinia Wood

European Robinia wood is natural, robust, and durable, particularly suitable for use in outdoor playground equipment. It complies with stringent standards such as FSC, has a smooth and pleasant touch, a natural and authentic appearance, and integrates well with natural surroundings. Its high durability, long lifespan, and being a natural and safe material make it a popular choice for use in playground equipment.



Rope Cables

Rope Cables are made of synthetic polypropylene (PP) fibers combined with a galvanized steel core for improved strength and durability. They meet strict standards such as MATI 1498/1497, ASTM A240, and EN 10088, ensuring durability and safety for use in playground equipment. The cables offer a soft and pleasant touch that does not harm the hands during use and are available in various diameters and colors, allowing for creative and aesthetic design.

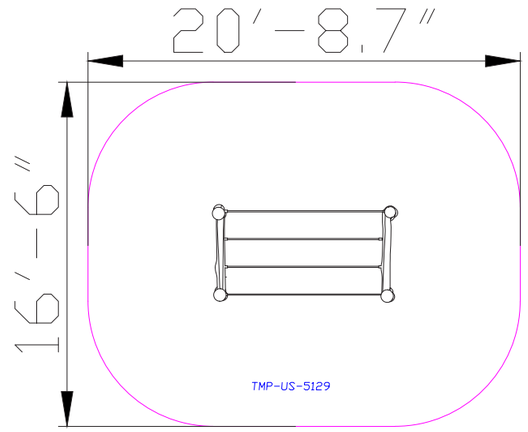



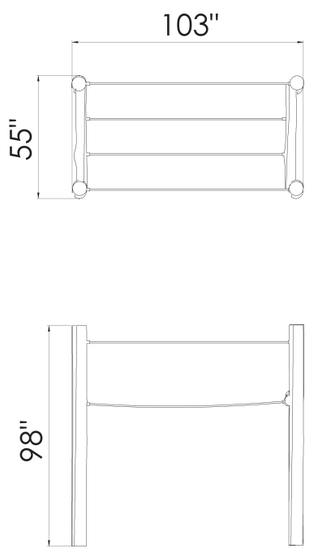

Hand and Foot Holds

Hand and foot holds provide support during play and use of the structure. Players develop their strength and coordination while maintaining stability and security.



Log Play Surface

The log play surface provides players with a natural and challenging play space, simulating walking or standing on a tree trunk. The surface combines a natural appearance with stability and safety, encouraging players to develop their balance and coordination while moving.



Motor Development

Foot-eye coordination - Improving coordination and balance through various equipment.



Cognitive Development

Spatial awareness- Improving the ability to understand and navigate space through mazes and courses..



Emotional Development

Imagination- Encouraging imagination and creating play worlds. Confidence-Building self-confidence and belief in one's personal abilities. Independence-Developing independence and the ability to make personal decisions. Patience- Practicing patience and waiting for one's turn.



Physical Development

Balancing- Improving balance and posture.