TSP-5131

Liberica

Liberica - Robinia wood fitness course

Recycled HDPE:

Robinia Wood:

Rope Cables:

Balancing

Rotation

Climbing

Jumping



Ages 5-12

Users 36

Dimensions L: 64'-11.1" W: 18'-6.7" H: 11'-10.1" | L: 2029 W: 580 H: 370 cm

Safety Zone 81'-7"/34'-1.5" | 2487 / 1040 cm

Fall Height 6'-8.6" | 210 cm

Accessible

Liberica is a challenging fitness course made from Robinia Wood, consisting of various elements designed to encourage children to develop motor skills, strength, and balance. The course includes climbing elements, challenging bridges, and crossing paths, providing a fun and challenging play experience.



Robinia Wood

European Robinia wood is natural, robust, and durable, particularly suitable for use in outdoor playground equipment. It complies with stringent standards such as FSC, has a smooth and pleasant touch, a natural and authentic appearance, and integrates well with natural surroundings. Its high durability, long lifespan, and being a natural and safe material make it a popular choice for use in playground equipment.



Recycled HDPE

HDPE (High-Density Polyethylene) is a recycled material made from high-density polyethylene, produced from recycled materials that allows for further recycling. It excels in resistance to UV rays and wear and tear, making it particularly suitable for use in outdoor playground equipment. Its touch is smooth and pleasant, and its appearance is maintained over time. The advantages include high resistance to harsh weather conditions and environmental preservation. The material is capable of absorbing high energy, which helps prevent fractures.



Rope Cables

Rope Cables are made of synthetic polypropylene (PP) fibers combined with a galvanized steel core for improved strength and durability. They meet strict standards such as MATI 1498/1497, ASTM A240, and EN 10088, ensuring durability and safety for use in playground equipment. The cables offer a soft and pleasant touch that does not harm the hands during use and are available in various diameters and colors, allowing for creative and aesthetic design.



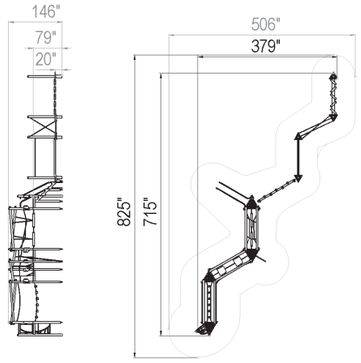

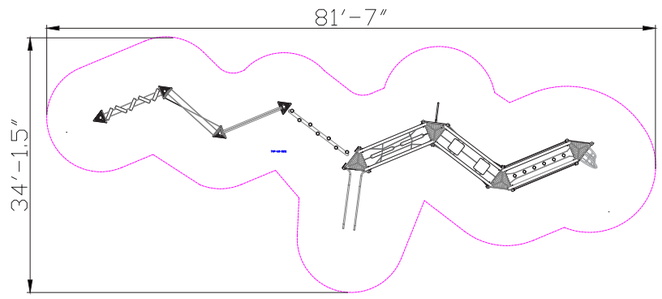



Tread Surface

The tread surface provides support and safety during play on the structure. The surface is designed to prevent slipping and improve players' stability and security.

Hand and Foot Holds

Hand and foot holds provide support during play and use of the structure. Players develop their strength and coordination while maintaining stability and security.



Log Play Surface

The log play surface provides players with a natural and challenging play space, simulating walking or standing on a tree trunk. The surface combines a natural appearance with stability and safety, encouraging players to develop their balance and coordination while moving.



Silde Boards

The slide boards provide an exciting sliding experience that combines fast movement and fun, and they also offer a challenging climbing option that develops players' motor skills and balance. Playing on the slide boards encourages players to take risks and improve their body control skills.



Ladder

The ladder provides vertical access to the play structure and encourages players to develop physical skills such as strength, coordination, and balance. Climbing the ladder promotes courage and independence as players face heights and new challenges. The ladder strengthens hand and arm muscles and encourages proper body use.



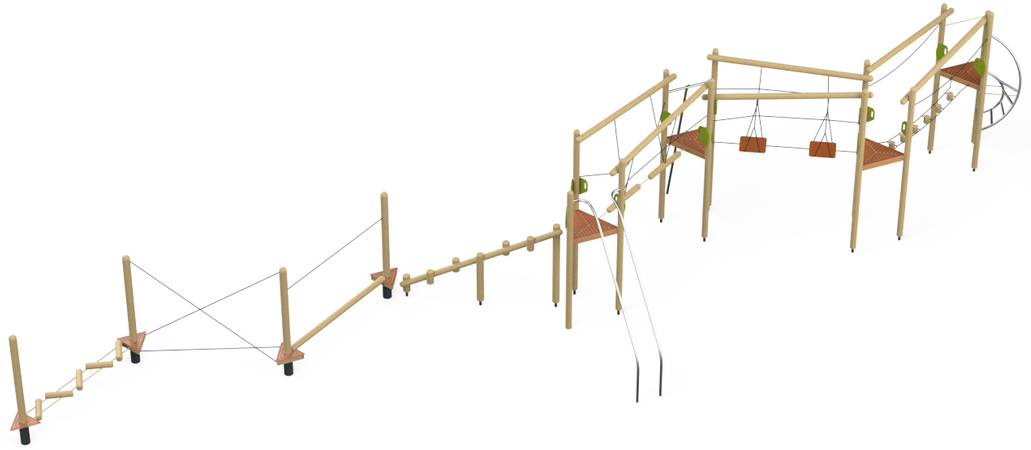

Motor Development

Core muscle strengthening- Strengthening abdominal and back muscles through challenging equipment. Foot-eye coordination - Improving coordination and balance through various equipment. Hand-eye coordination - Developing coordination and precision in activities requiring fine motor skills.

Cognitive Development

Concentration- Developing the ability to focus and maintain attention in equipment requiring concentration. Spatial awareness- Improving the ability to understand and navigate space through mazes and courses.. Regulation of force- Developing the ability to apply the right amount of force according to the activity.

Emotional Development

Perseverance- Encouraging perseverance and repeated attempts. Achievement- Developing a sense of accomplishment and satisfaction from success in challenging equipment.

Social Development

Cooperation- Encouraging joint work and reaching shared goals. Communication- Developing effective and clear communication skills with playmates.

Physical Development

Climbing - Strengthening arm and leg muscles, developing fitness and endurance Balancing- Improving balance and posture.