TSP-5132B

Merlin B

Robinia wood challenging play system model
Merlin B

Robinia Wood:

Balancing

Climbing



Ages 5-12

Users 42

Dimensions L: 31'-9.3" W: 18' 9.4" H: 16'-7.7" | L: 993 W: 587 H: 520 cm

Safety Zone: 46'-3.9" / 34'-5.4"

Fall Height 6' 8.6" | 210 cm

Accessible

The Merlin B model offers a challenging play experience combining climbing, walking on ropes and bridges, and sliding. The system is made from natural European Robinia Wood and includes rope nets for climbing and walking, various climbing ladders, and a challenging Robinia bridge. The stainless steel slides and curved ladders add various levels of difficulty, suitable for children seeking a physical adventure filled with challenges. The system is ideal for developing balance, strength, and coordination while engaging in fun play.



Robinia Wood

European Robinia wood is natural, robust, and durable, particularly suitable for use in outdoor playground equipment. It complies with stringent standards such as FSC, has a smooth and pleasant touch, a natural and authentic appearance, and integrates well with natural surroundings. Its high durability, long lifespan, and being a natural and safe material make it a popular choice for use in playground equipment.

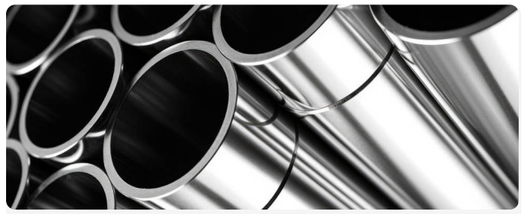

Stainless Steel 316

Stainless Steel 316 is an alloy of iron, chromium, nickel, and molybdenum, providing exceptional resistance to corrosion, rust, and stains. It meets strict playground equipment standards such as ASTM A240 and EN 10088, offering a smooth touch and shiny appearance. Particularly suitable for use in coastal and humid areas, and industrial and urban environments. Even in these challenging areas, Stainless Steel 316 maintains a clean and shiny appearance over time.Steel 316 maintains a clean and shiny appearance over time.



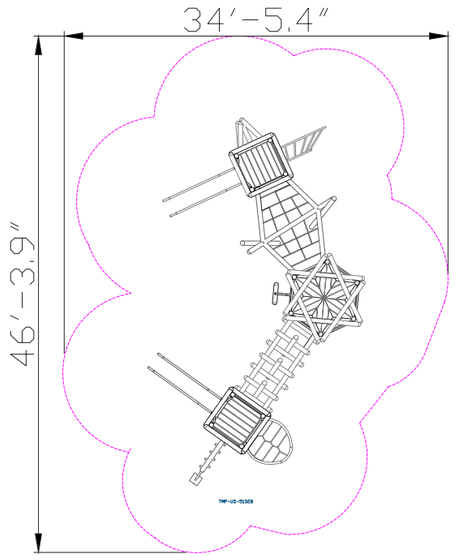

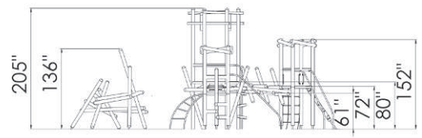

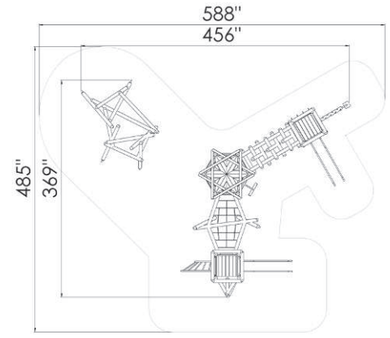



Rope Ladder

The rope ladder provides vertical access to the play structure and encourages players to develop physical skills such as strength, coordination, and balance. Climbing the rope ladder strengthens hand and leg muscles and develops a sense of balance. The ladder encourages players to face challenges and develop flexibility and .agility



Slide Boards

The slide boards provide an exciting sliding experience that combines fast movement and fun, and they also offer a challenging climbing option that develops players' motor skills and balance. Playing on the slide boards encourages players to take risks and .improve their body control skills

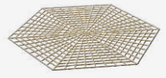

Net Floor

The net floor offers players a fascinating experience that combines stability and challenge. The floor is made of rope netting, providing a sensation of light hovering above the ground. Playing on the net floor develops balance, coordination, and .self-confidence in the players



Log Play Surface

The log play surface provides players with a natural and challenging play space, simulating walking or standing on a tree trunk. The surface combines a natural appearance with stability and safety, encouraging players to develop their balance and coordination while .moving



Accessibility Ramp

The accessibility ramp provides easy and safe access for wheelchairs, allowing players with disabilities to move easily and integrate smoothly into the games. Its design ensures stability and security, allowing everyone to enjoy the play experience .equally and accessibly



Designed Climbing Element

The designed climbing element combines physical challenge with a unique and inviting design. Players develop physical skills such as strength, coordination, and balance while playing in a creative and designed environment. The unique design encourages players to play and explore, fostering their imagination .and creativity



Hand and Foot Holds

Hand and foot holds provide support during play and use of the structure. Players develop their strength and coordination while maintaining .stability and security



Ladder

The ladder provides vertical access to the play structure and encourages players to develop physical skills such as strength, coordination, and balance. Climbing the ladder promotes courage and independence as players face heights and new challenges. The ladder strengthens hand and arm muscles and encourages proper body .use





Motor Development

Foot-eye coordination - Improving coordination and balance through various equipment. Hand-eye coordination - Developing coordination and precision in activities .requiring fine motor skills

Emotional Development

Courage- Facing fears and new challenges. Confidence- Building self-confidence and belief in one's personal abilities. Independence- Developing independence and the ability to make personal decisions. Patience- Practicing patience and waiting for one's turn. Resilience- Coping with failure and trying again.

Social Development

Communication- Developing effective and clear communication skills with playmates. Friendship creation- Creating friendships and strengthening social bonds.

Physical Development

Climbing - Strengthening arm and leg muscles, developing fitness and endurance Balancing- Improving .balance and posture