TSP-5154

Natura

Natura - Robinia wood fitness course

Robinia Wood:
Rope Cables:

Balancing

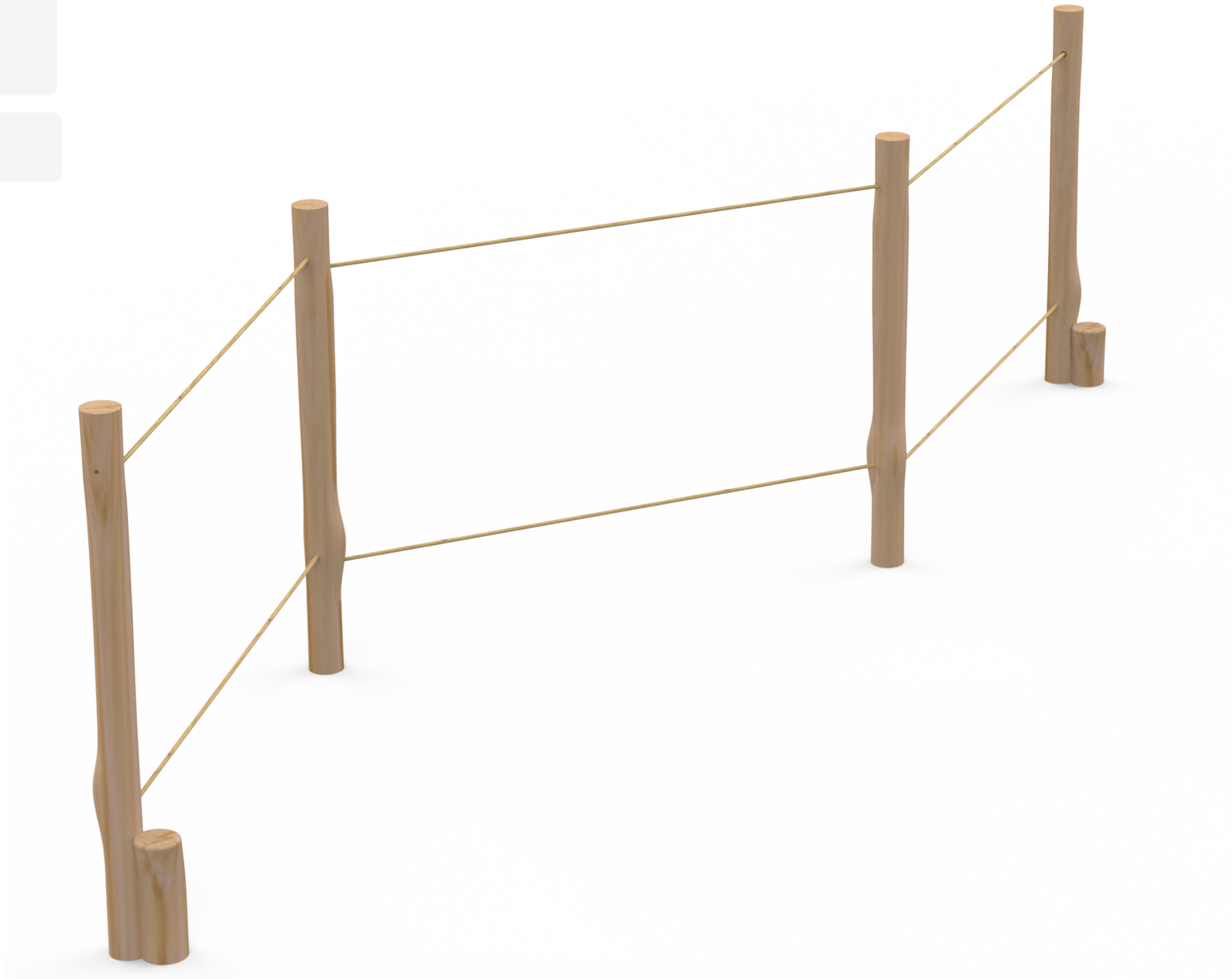

Ages 5-12

Users 16

Dimensions L: 15'-11.6" W: 10'-3.6" H: 6'-4.8" | L: 499 W: 322 H: 200

Safety Zone 29'-1.1"/23' | 887 / 701 cm

Fall Height 1'-9.1" | 55 cm

Accessible

Natura is a rope structure made from Robinia Wood, designed to challenge children through climbing and maintaining balance. The natural design blends into the playground surroundings, with ropes stretched between the posts allowing children to develop their motor skills in a fun and safe way.



Robinia Wood

European Robinia wood is natural, robust, and durable, particularly suitable for use in outdoor playground equipment. It complies with stringent standards such as FSC, has a smooth and pleasant touch, a natural and authentic appearance, and integrates well with natural surroundings. Its high durability, long lifespan, and being a natural and safe material make it a popular choice for use in playground equipment.



Rope Cables

Rope Cables are made of synthetic polypropylene (PP) fibers combined with a galvanized steel core for improved strength and durability. They meet strict standards such as MATI 1498/1497, ASTM A240, and EN 10088, ensuring durability and safety for use in playground equipment. The cables offer a soft and pleasant touch that does not harm the hands during use and are available in various diameters and colors, allowing for creative and aesthetic design.

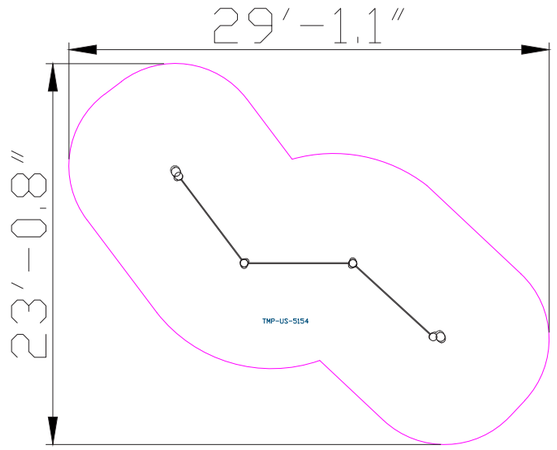



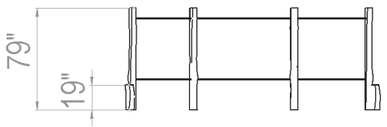

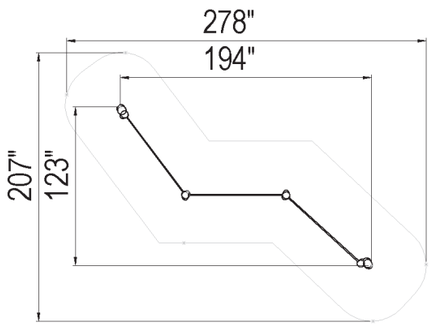

Hand and Foot Holds

Hand and foot holds provide support during play and use of the structure. Players develop their strength and coordination while maintaining stability and security.



Climbing Element

The climbing element offers a physical challenge that develops muscle strength, coordination, and balance. Climbing on the element encourages children to overcome fears and build self-confidence and perseverance. Additionally, the element helps develop problem-solving skills as children look for efficient and safe ways to climb.



Motor Development

Foot-eye coordination - Improving coordination and balance through various equipment.



Cognitive Development

Spatial awareness- Improving the ability to understand and navigate space through mazes and courses.



Emotional Development

Imagination- Encouraging imagination and creating play worlds. Confidence-Building self-confidence and belief in one's personal abilities. Independence-Developing independence and the ability to make personal decisions. Patience- Practicing patience and waiting for one's turn.



Physical Development

Balancing- Improving balance and posture.