TSP-5158

Corato

Corato - Robinia wood fitness course

Robinia Wood:

Balancing



Ages 5-12

Users 4

Dimensions L: 6'-8.6" W: 1'-6.4" H: 1'-10.3" | L: 210 W: 48 H: 58 cm

Safety Zone 20'-1.9"/13'-7" | 614 / 414 cm

Fall Height 1'-9.1" | 50 cm

Accessible

The Corato wood fitness course is part of a natural product line made from durable and high-quality Robinia Wood. The course is designed for physical activity, climbing, and balance, blending harmoniously with the surrounding nature. The simple and natural design allows children to experience challenging motor activities while connecting with the environment and enjoying outdoor play.



Log Play Surface

The log play surface provides players with a natural and challenging play space, simulating walking or standing on a tree trunk. The surface combines a natural appearance with stability and safety, encouraging players to develop their balance and coordination while moving.

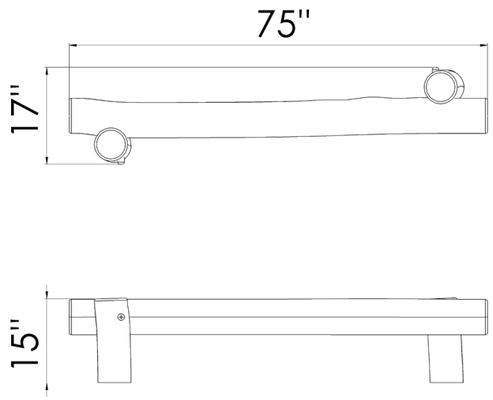

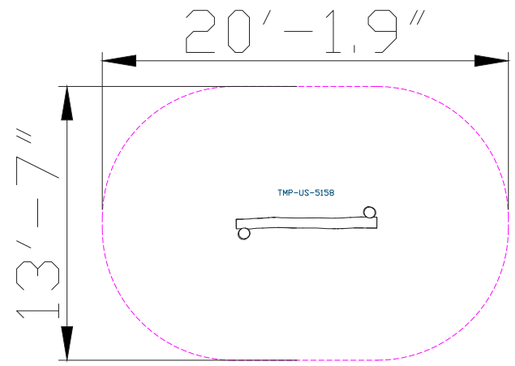





Robinia Wood

European Robinia wood is natural, robust, and durable, particularly suitable for use in outdoor playground equipment. It complies with stringent standards such as FSC, has a smooth and pleasant touch, a natural and authentic appearance, and integrates well with natural surroundings. Its high durability, long lifespan, and being a natural and safe material make it a popular choice for use in playground equipment.

Motor Development

Foot-eye coordination - Improving coordination and balance through various equipment.

Cognitive Development

Regulation of force- Developing the ability to apply the right amount of force according to the activity.

Emotional Development

Perseverance- Encouraging perseverance and repeated attempts. Achievement- Developing a sense of accomplishment and satisfaction from success in challenging equipment.

Physical Development

Balancing- Improving balance and posture.